# ABBREVIATIONS

CLARIFY WITH ARCHITECT ALL ABBREVIATIONS NOT LISTED

| | |
|---|---|
| AB. | ANCHOR BOLT |
| ACT | ACOUSTICAL CEILING TILE |
| A.F.F. | ABOVE FINISHED FLOOR |
| ALUM. | ALUMINUM |
| ALT. | ALTERNATE |
| APPROX. | APPROXIMATE |
| ARCH. | ARCHITECTURAL |
| BD. | BOARD |
| BLDG. | BUILDING |
| BOT. | BOTTOM |
| BTWN. | BETWEEN |
| B.U.R. | BUILT UP ROOFING |
| B.W. | BOTH WAYS |
| C.J. | CONTROL JOINT |
| CLG. | CEILING |
| C.M.U. | CONCRETE MASONRY UNIT |
| COL. | COLUMN |
| CONC. | CONCRETE |
| CONN. | CONNECTION |
| CONSTR. | CONSTRUCTION |
| CONT. | CONTINUOUS |
| C.T. | CERAMIC TILE |
| DET./DTL. | DETAIL |
| DIA. Φ | DIAMETER |
| DN. | DOWN |
| DWG. | DRAWING |
| EA. | EACH |
| E.J. | EXPANSION JOINT |
| E.I.F.S. | EXTERIOR INSULATION & FINISH SYSTEM |
| ELEC. | ELECTRICAL |
| ELEV. | ELEVATION |
| ENCL. | ENCLOSURE |
| EQUIP. | EQUIPMENT |
| E.W.C. | ELECTRIC WATER COOLER |
| EXP. | EXPANSION |
| EXT. | EXTERIOR |
| F.A. | FIRE ALARM |
| F.D. | FLOOR DRAIN |
| F.D.C. | FIRE DEPARTMENT CONNECTION |
| F.E. | FIRE EXTINGUISHER |
| F.E.C. | FIRE EXTINGUISHER CABINET |
| F.F. | FINNISH FLOOR |
| F.H.C. | FIRE HOSE CABINET |
| FIN. | FINISH |
| FLR. | FLOOR |
| FLUOR. | FLUORESCENT |
| FT. | FOOT OR FEET |
| FTG. | FOOTING |
| GA. | GAUGE |
| GALV. | GALVANIZED |
| G.C. | GENERAL CONTRACTOR |
| GWB. | GYPSUM WALL BOARD |
| H.B. | HOSE BIB |
| H.C. | HANDICAPPED |
| H.M. | HOLLOW METAL |
| HR. | HOUR |
| HT. | HEIGHT |
| HVAC | HEATING, VENTILATION & AIR CONDITIONING |
| I.D. | INSIDE DIAMETER |
| INSUL. | INSULATION |
| INT. | INTERIOR |
| LAM. | LAMINATE |
| LAV. | LAVATORY |
| MAX. | MAXIMUM |
| MECH. | MECHANICAL |
| MEMB. | MEMBRANE |
| MFR. | MANUFACTURER |
| M.H. | MANHOLE |
| MIN. | MINIMUM |
| MISC. | MISCELLANEOUS |
| M.O. | MASONRY OPENING |
| N.I.C. | NOT IN CONTRACT |
| NO. | NUMBER |
| NOM. | NOMINAL |
| N.T.S. | NOT TO SCALE |
| O.C. | ON CENTER |
| O.D. | OUTSIDE DIAMETER |
| OH. | OVERHEAD |
| OPG. | OPENING |
| OPP. | OPPOSITE |
| P.T. | PRESSURE-TREATED |
| Q.T. | QUARRY TILE |
| R.D. | ROOF DRAIN |
| REINF. | REINFORCED |
| REQ'D. | REQUIRED |
| RM | ROOM |
| R.O. | ROUGH OPENING |
| S.C. | SOLID CORE |
| SCHED. | SCHEDULE |
| SECT. | SECTION |
| S.F. | SQUARE FOOT |
| SHT. | SHEET |
| SPEC. | SPECIFICATION |
| SQ. OR ▫ | SQUARE |
| STRUC. | STRUCTURAL |
| SUSP. | SUSPENDED |
| T & G | TONGUE & GROOVE |
| TYP. | TYPICAL |
| U.O.N. | UNLESS OTHERWISE NOTED |
| VCT | VINYL COMPOSITION TILE |
| VERT. | VERTICAL |
| W/ | WITH |
| W.C. | WATER CLOSET |
| WD. | WOOD |
| W/O | WITHOUT |
| ℄ | CENTERLINE |
| PL | PLATE |

# PROJECT TITLE

PROPOSED ADDITION & RENOVATION
TO EXISTING OFFICE BUILDING

10 MANSFIELD DRIVE
BYRAM TOWNSHIP, NJ 07874

# LIST OF DRAWINGS

| | | | |
|---|---|---|---|
| CS-100-C | COVER SHEET | S-9 | TYPICAL SECTION AND DETAILS |
| CR-100-C | CODE REVIEW | S-10 | TYPICAL SECTION AND DETAILS |
| CR-101-C | FIRST FLOOR EGRESS PLAN | S-11 | TYPICAL DRAWINGS AND SECTIONS |
| CR-102-C | ATTIC EGRESS PLAN | S-12 | TYPICAL SECTIONS AND DETAILS |
| D-100-C | DEMO PLAN | | |
| HC-100-C | COMMERICAL ACCESSIBILITY DETAILS & NOTES | | MECHANICAL DRAWINGS |
| A-100-C | GROUND FLOOR PLAN | M-100 | HVAC COVER SHEET |
| A-101-C | ATTIC PLAN | M-200 | HVAC FIRST FLOOR PLAN |
| A-102-C | ROOF PLAN & DETAILS | M-201 | HVAC ATTIC PLAN |
| A-103-C | GROUND FLOOR REFLECTED CEILING PLANS | M-202 | HVAC ROOF PLAN |
| A-104-C | ATTIC REFLECTED CEILING PLANS | M-300 | HVAC SCHEDULE SHEET |
| A-200-C | FRONT & RIGHT SIDE ELEVATIONS | M-301 | REFRIGERANT PIPING DIAGRAMS |
| A-201-C | REAR & LEFT SIDE ELEVATIONS | M-302 | HVAC DETAILS |
| A-202-C | ENLARGED ENTRANCE ELEVATION AND ELEVATION DETAILS | M-303 | HVAC DETAILS AND SCHEDULES |
| A-300-C | LONGITUDINAL & TRANSVERSE SECTIONS | M-400 | HVAC CONTROLS |
| A-301-C | EXTERIOR WALL SECTIONS | | |
| A-400-C | ENLARGED BATH PLAN, ELEVATIONS & PLUMBING SCHED. | | ELECTRICAL DRAWINGS |
| A-401-C | ENLARGED STAIR PLAN & SECTION, AND DETAILS | E-100 | GENERAL NOTES AND SPECIFICATIONS |
| A-402-C | ENLARGED PUBLIC ACCESS AREA & DESK ELEVATIONS | E-200 | ADMIN & CIVIL-ELECTRICAL REFLECTED CEILING PLAN |
| A-403-C | ENLARGED ASSEMBLY DESK ELEVATIONS | | |
| A-404-C | ENLARGED ASSEMBLY ROOM ELEVATIONS | E-201 | ADMIN & CIVIL-REFLECTED CEILING ATTIC PLANS |
| A-405-C | PAINT PLAN AND SCHEDULE | E-202 | ADMIN & CIVIL-ELECTRICAL GROUND FLOOR PLANS |
| A-406-C | ENLARGED CONF. ROOM & JAN. CLOSET ELEV. & SCHED. | E-203 | ADMIN & CIVIL-ELECTRICAL ATTIC PLANS |
| A-500-C | FIRESTOP DETAILS | E-204 | ADMIN & CIVIL-ELECTRICAL DETAILS AND SCHEDULE |
| A-600-C | SCHEDULES & DETAILS | | |
| A-601-C | WALL AND FLOOR ASSEMBLIES | E-205 | ADMIN & CIVIL-ELECTRICAL SINGLE LINE DIAGRAM & NOTES |
| F-100-C | FURNITURE PLAN | | |
| FP-100-C | GROUND FLOOR PATTERN PLAN | E-301 | ADMIN & CIVIL-LIGHTING CONTROLS AND LAYOUT |
| IS-100-C | INTERNAL SIGNAGE PLAN | E-302 | ADMIN & CIVIL-LIGHTING CONTROLS AND LAYOUT |
| SEC-100-C | SECURITY CAMERA LOCATION PLAN | E-303 | ADMIN & CIVIL-LIGHTING CONTROLS AND LAYOUT |
| | | E-304 | ADMIN & CIVIL-LIGHTING CONTROLS AND LAYOUT |
| | STRUCTURAL DRAWINGS | E-305 | ADMIN & CIVIL-LIGHTING CONTROLS AND LAYOUT |
| S-1 | NOTES, ANCHOR BOLTS, & DRAWING LIST | | |
| S-2 | FOUNDATION PLAN | | PLUMBING DRAWINGS |
| S-3 | 1ST FLOOR PLAN | P-100-C | PLUMBING COVER SHEET |
| S-4 | ATTIC PLAN | P-200-C | PLUMBING SANITARY PLAN |
| S-5 | ROOF FRAMING PLAN | P-300-C | PLUMBING WATER SUPPLY PLAN |
| S-6 | SECTION AND DETAILS | P-400-C | PLUMBING ATTIC PLAN |
| S-7 | SECTION AND DETAILS | P-500-C | PLUMBING DETAILS |
| S-8 | TYPICAL SECTION AND DETAILS | | |

# APPLICABLE CODES

INTERNATIONAL BUILDING CODE, NEW JERSEY EDITION 2021

INTERNATIONAL MECHANICAL CODE 2021

NATIONAL ELECTRICAL CODE 2020

NATIONAL STANDARD PLUMBING CODE 2021

AMERICAN NATIONAL STANDARD
ACCESSIBLE & USABLE BUILDINGS & FACILITIES ICC/ANSI A117.1-2017

# PROJECT LOCATION

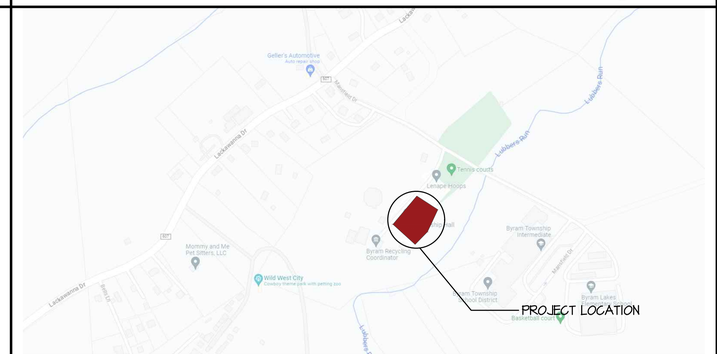


# REQUIRED SUBMITTALS

| SUBMITTALS | PRODUCT INFO | SAMPLES | COLOR SELECTION | SHOP DRAWINGS | WARRANTY | MOCK UP | MIX DESIGN | CALCULATIONS |
|---|---|---|---|---|---|---|---|---|
| WINDOWS | X | | | X | X | | | X |
| FLOORING | X | X | X | | X | | | |
| PAINT | X | | | | | | | |
| HVAC DUCTWORK | X | | | X | | | | X |
| HVAC EQUIPMENT | X | | | X | X | | | |
| ROOFING | X | X | X | | X | | | |
| GENERATOR | X | | | X | X | | | X |
| INSULATION | X | | | | | | | |
| DOORS | X | X | X | | X | | | |
| HARDWARE | X | | X | | X | | | |
| LIGHT FIXTURES | X | X | X | | X | | | |
| TRIMS/ MOLDING | X | X | X | | | | | |
| PLUMBING FIXTURES | X | | X | | X | | | |
| APPLIANCES | X | | X | | X | | | |
| CABINETS | X | X | X | X | X | | | |
| COUNTERTOPS | X | X | X | X | X | | | |
| WATER HEATERS | X | | | | X | | | |
| CONCRETE/CMU | X | | | | | | X | |
| ASPHALT PAVING | | | | | | | X | |
| CAULKING | X | | X | | | | | |
| CEILINGS | X | X | X | | | | | |
| GYP. BOARD | | | | | | | | |
| STEEL PANEL WALLS | X | | | X | | | | X |
| STRUCTURAL STEEL | | | | X | | | | X |
| SIGNS AND LETTERING | X | X | X | X | | | | |
| MASONRY | X | | X | | | X | | |

# ARCHITECTURAL SYMBOLS

SECTION NUMBER / SHEET NUMBER (A-1)

ELEVATION NUMBER / SHEET NUMBER (A-1)

INTERIOR ELEVATION NUMBER / SHEET NUMBER (A, B, C, D / A-1)

DETAIL NUMBER / SHEET NUMBER (A-1)

COLUMN GRID (X)

NORTH DESIGNATION

100 EXISTING CONTOUR LINE

100 NEW CONTOUR LINE

0.00' DATUM ELEVATION

10.00' SPOT ELEVATION

1" DN. CHANGE IN ELEVATION

PROPERTY LINE

12 / 5 ROOF SLOPE

CENTER LINE

2 REVISION

GRAPHIC SCALE

100 ROOM NUMBER

001 DOOR NUMBER

A WINDOW TYPE

1 WALL TYPE

# GENERAL NOTES

1. CONTRACTOR SHALL COORDINATE ALL TRADES AND SHALL BE RESPONSIBLE FOR THE PROPER LOCATION OF THE ELECTRICAL RECEPTACLES, SWITCHES, LIGHT FIXTURES, HVAC GRILLES, SOUND EQUIPMENT, MOTION SENSORS, SPRINKLER HEADS, ETC., AND THEIR POTENTIAL INTERFERENCE WITH OTHER TRADES INCLUDING BUT NOT LIMITED TO DOOR SWINGS, FURNITURE, ETC., REVIEW DRAWINGS AND ASSUME PROPER COORDINATION AND CLEARANCES FOR ALL TRADES, ANY RELOCATION RESULTING FROM SUCH INTERFERENCE SHALL BE DONE AT NO COST TO THE OWNER.

2. CONTRACTOR SHALL CHECK & VERIFY ALL DIMENSIONS, NOTES, AND CONDITIONS AT THE JOB SITE AND REPORT ANY DISCREPANCIES TO ARCHITECT IN WRITING BEFORE ANY CONSTRUCTION IS STARTED.

3. ALL WORK TO COMPLY WITH NJUCC STATE CODES AND OTHER GOVERNMENTAL AUTHORITIES HAVING JURISDICTION.

4. ANY CHANGES OR DEVIATIONS FROM THESE DRAWINGS SHALL NOT BE MADE WITHOUT WRITTEN CONSENT FROM THE OWNER.

5. DO NOT SCALE THESE DRAWINGS, ONLY WRITTEN DIMENSIONS PREVAIL. NOTES AND THE LIKE ARE TYPICAL AND APPLY IN GENERAL TO SIMILAR CONDITIONS.

6. CONTRACTOR SHALL OBTAIN PERMITS AND PAY FEES. PRIOR TO COMMENCEMENT OF WORK, CONTRACTOR SHALL PROVIDE OWNER WITH PROOF OF PERMITS, INSURANCE, ETC.

7. THE ARCHITECT/ ENGINEER HAS NOT BEEN RETAINED TO SUPERVISED ANY CONSTRUCTION OR INSTALLATION OF ANY EQUIPMENT.

8. HANDICAPPED ACCESSIBILITY CLEARANCES AS INDICATED ON DRAWING HC-100C COMMERCIAL ACCESSIBILITY DETAILS AND NOTES, SHALL TAKE PRECEDENCE. CONTRACTOR SHALL REVIEW REQUIRED CLEARANCES AND REPORT ANY DISCREPANCIES TO ARCHITECT PRIOR TO START OF WORK.

**BYRAM MUNICIPAL BUILDING ADMINISTRATIVE/CIVIL**
**LOCATED AT 10 MANSFIELD DRIVE**
**BLOCK 365 - LOT 16.01**
**BOROUGH OF BYRAM**
**SUSSEX COUNTY, NEW JERSEY**


NADER house + design
THE NADER GROUP, LLC
Architects, Engineers & Surveyors
111 Mill Street
Hackettstown, NJ 07840
p. 908.850.3500 | f. 908.441.5803
e. wassim.nader@thenadergroup.com
www.naderhouseofdesign.com
CERTIFICATE OF AUTHORIZATION
Engineering & Survey
No. 24GA28213500
Architecture
No. 21AC00126800


CONSTRUCTION DOCUMENTS

| NO. | DATE | REVISION | CHK |
|---|---|---|---|
| 04 | 08/01/23 | BID SET | CHK |
| 03 | 05/01/23 | CLIENT REVISIONS | CHK |
| 02 | 07/28/22 | COORDINATION REVISIONS | CHK |
| 01 | 06/28/22 | TOWN COMMENTS | CHK |
| 00 | 05/06/22 | TOWN SUBMISSION | CHK |

DRAWN BY: CC, ES
SCALE: AS SHOWN
DATE: OCTOBER 5TH, 2020
JOB NO. 18TNG029C

COVER SHEET

DRAWING NO.
CS-100-C

PLOT DATE: 2023-08-04

© 2023 NADER GROUP-ASA, NADER HOUSE OF DESIGN

# CODE REVIEW

PROJECT: PROPOSED RENOVATION & ADDITION TO AN EXISTING MUNICIPAL BUILDING

PROJECT ADDRESS: 10 MANSFIELD DRIVE, LOTS 16.01 - BLOCK 365
BYRAM TOWNSHIP, NEW JERSEY

ZONING DISTRICT: R-2

USE GROUPS: 'B' BUSINESS (I.B.C. 311.3)
'A-3' ASSEMBLY (I.B.C. 309.1)
'S-2' STORAGE (I.B.C. 311.3)

CONSTRUCTION CLASSIFICATIONS: 1ST FLOOR & ABOVE 'VB'

GROSS FLOOR AREA:

| | |
|---|---|
| ASSEMBLY ROOM | 1,773 S.F. |
| OFFICE & ACCESSORY SPACES | 6,059 S.F. |
| TOTAL | 7,832 S.F. |

INTERNATIONAL BUILDING CODE 2021 - NEW JERSEY EDITION (I.B.C)

SECTION 1004: OCCUPANT LOADS
MAXIMUM FLOOR AREA ALLOWANCES PER OCCUPANT (I.B.C. TABLE 1004.5)
OCCUPANCY BASE ON MAXIMUM PERMITTED BY LOAD CALCULATION. ACTUAL OCCUPANCY TO BE DETERMINED BY TENANT.

ASSEMBLY ROOM W/O FIXED SEATS
- ASSEMBLY ROOM GROSS FLOOR AREA = 1,773 SF.
7 SF. NET PER OCCUPANT..... 253 ALLOWABLE OCCUPANTS
(100 ACTUAL OCCUPANT)

MUNICIPAL OFFICE SPACE
- MUNICIPAL OFFICE SPACE GROSS FLOOR AREA = 6,059 SF.
150 SF. GROSS PER OCCUPANT..... 40 ALLOWABLE OCCUPANTS
(20 ACTUAL OCCUPANTS)

ATTIC STORAGE
- ATTIC STORAGE FLOOR AREA = 2,644 SF.
300 SF. GROSS PER OCCUPANT..... 8 ALLOWABLE OCCUPANTS
(0 ACTUAL OCCUPANTS)

TOTAL OCCUPANT LOADS..... 301 ALLOWABLE OCCUPANTS
(120 ACTUAL OCCUPANTS)

SECTION 903: AUTOMATIC FIRE SUPPRESSION SYSTEM
TABLE 903.2.13: GROUP B. AN AUTOMATIC SPRINKLER SYSTEM IS NOT REQUIRED WHERE FIRE AREA DOES NOT EXCEED 18,000 SF.

TABLE 903.2.13: GROUP A-3. AN AUTOMATIC SPRINKLER SYSTEM IS NOT REQUIRED WHERE FIRE AREA DOES NOT EXCEED 18,000 SF.

TABLE 903.2.13: GROUP S-2. AN AUTOMATIC SPRINKLER SYSTEM IS NOT REQUIRED WHERE FIRE AREA DOES NOT EXCEED 18,000 SF PER FLOOR.

TABLE 1006.3.4(2): EGRESS FROM STORIES
AS THE STORAGE AREAS DO NOT HAVE AN OCCUPANT LOAD OF MORE THAN 29 PEOPLE OR A TRAVEL DISTANCE THAT EXCEEDS 75' THEY ONLY REQUIRE ONE EXIT.

MAXIMUM TRAVEL DISTANCE = 200 FT. WITHOUT SPRINKLER SYSTEM (I.B.C. TABLE 1017.2)

TABLE 1017.2: EXIT ACCESS TRAVEL DISTANCE (WITHOUT AUTOMATIC SPRINKLER SYSTEM)
GROUP B NOT TO EXCEED 200 FT.
GROUP A-3 NOT TO EXCEED 200 FT.
GROUP S-2 NOT TO EXCEED 300 FT.

SECTION: 508.4
REQUIRED FIRE RATED SEPARATION OF OCCUPANCIES

SEPARATION BETWEEN 'B' & 'A-3' OCCUPANCY :..... 2 HR.

SEPARATION BETWEEN 'B' & 'S-2' OCCUPANCY :..... 2 HR.

SEPARATION BETWEEN 'A-3' & 'S-2' OCCUPANCY :..... 1 HR.

FIRE-RESISTANT RATING REQUIREMENTS FOR BUILDING ELEMENTS (I.B.C. TABLE 601)
CONSTRUCTION CLASSIFICATION = VB
STRUCTURAL FRAME
INCLUDING COLUMNS, GIRDERS AND TRUSSES:.....0 HR.

BEARING & NONBEARING WALLS AND PARTITIONS

EXTERIOR: (I.B.C. TABLE 601 & 705.5)
LESS THAN 5 FT.....1 HR.
GREATER THAN 5 FT. BUT LESS THAN 10 FT.....1 HR.
GREATER THAN 10 FT. BUT LESS THAN 30 FT.....0 HR.

INTERIOR:.....0 HR.

OCCUPANCY SEPARATION 'M' & 'S-1': (I.B.C. TABLE 508.4)
WITHOUT AUTOMATIC SPRINKLER SYSTEM.....0 HR.

FLOOR CONSTRUCTION
INCLUDING SUPPORTING BEAMS AND JOISTS:.....0 HR.

ROOF CONSTRUCTION
INCLUDING SUPPORTING BEAMS AND JOISTS:.....0 HR.

SMOKE BARRIERS (I.B.C. SECTION 709.3).....1 HR.

INCIDENTAL USE AREAS (I.B.C. TABLE 509.1)
FURNACE ROOM WHERE LARGEST PIECE OF EQUIP. IS OVER 400,000 BTU PER HR. INPUT.....1 HR. OR PROVIDE AUTOMATIC SPRINKLER SYSTEM.

BOILER ROOM WHERE BOILER IS OVER 15 PSI AND 10 HORSEPOWER.....1 HR. OR PROVIDE AUTOMATIC SPRINKLER SYSTEM.

NATIONAL STANDARD PLUMBING CODE 2021, TABLE 7.21.1

ASSEMBLY W/O FIXED CHAIRS (A-3) HAS ACTUAL OCCUPANCY OF 101 PEOPLE.
101 x 50% = 50 MALES AND 50 FEMALES (TABLE 7.21.1 NOTE 4)

51 MALES = TWO (2) WATER CLOSETS
ONE (1) URINAL
THREE (3) LAVATORIES

50 FEMALES = THREE (3) WATER CLOSETS
THREE (3) LAVATORIES

ONE (1) UTILITY SINK PER FLOOR
ONE (1) WATER DRINKING FACILITY PER 500 PEOPLE

BUSINESS (B) HAS ACTUAL OCCUPANCY OF 101 PEOPLE.
38 x 50% = 29 MALES AND 29 FEMALES (TABLE 7.21.1 NOTE 4)

29 MALES = ONE (1) WATER CLOSETS
ONE (1) LAVATORIES

29 FEMALES = ONE (1) WATER CLOSETS
ONE (1) LAVATORIES

ONE (1) UTILITY SINK PER FLOOR
ONE (1) WATER FOUNTAIN PER 100 PEOPLE

**BYRAM MUNICIPAL BUILDING ADMINISTRATIVE/CIVIL**
**LOCATED AT 10 MANSFIELD DRIVE**
**BLOCK 365 - LOT 16.01**
**BOROUGH OF BYRAM**
**SUSSEX COUNTY, NEW JERSEY**


NADER house + design
THE NADER GROUP, LLC
Architects, Engineers & Surveyors
111 Mill Street
Hackettstown, NJ 07840
p. 908.850.3500 | f. 908.441.5803
e. wassim.nader@thenadergroup.com
www.naderhouseofdesign.com
CERTIFICATE OF AUTHORIZATION
Engineering & Survey
No. 24GA28213500
Architecture
No. 21AC00126800


CONSTRUCTION DOCUMENTS

| NO. | DATE | REVISION | CHK |
|---|---|---|---|
| 04 | 08/01/23 | BID SET | CHK |
| 03 | 05/01/23 | CLIENT REVISIONS | CHK |
| 02 | 07/28/22 | COORDINATION REVISIONS | CHK |
| 01 | 06/28/22 | TOWN COMMENTS | CHK |
| 00 | 05/06/22 | TOWN SUBMISSION | CHK |

DRAWN BY: CC, ES
SCALE: AS SHOWN
DATE: OCTOBER 5TH, 2020
JOB NO. 18TNG029C

CODE REVIEW

DRAWING NO.
CR-100-C

PLOT DATE: 2023-08-03

© 2023 NADER GROUP ASA, NADER HOUSE OF DESIGN

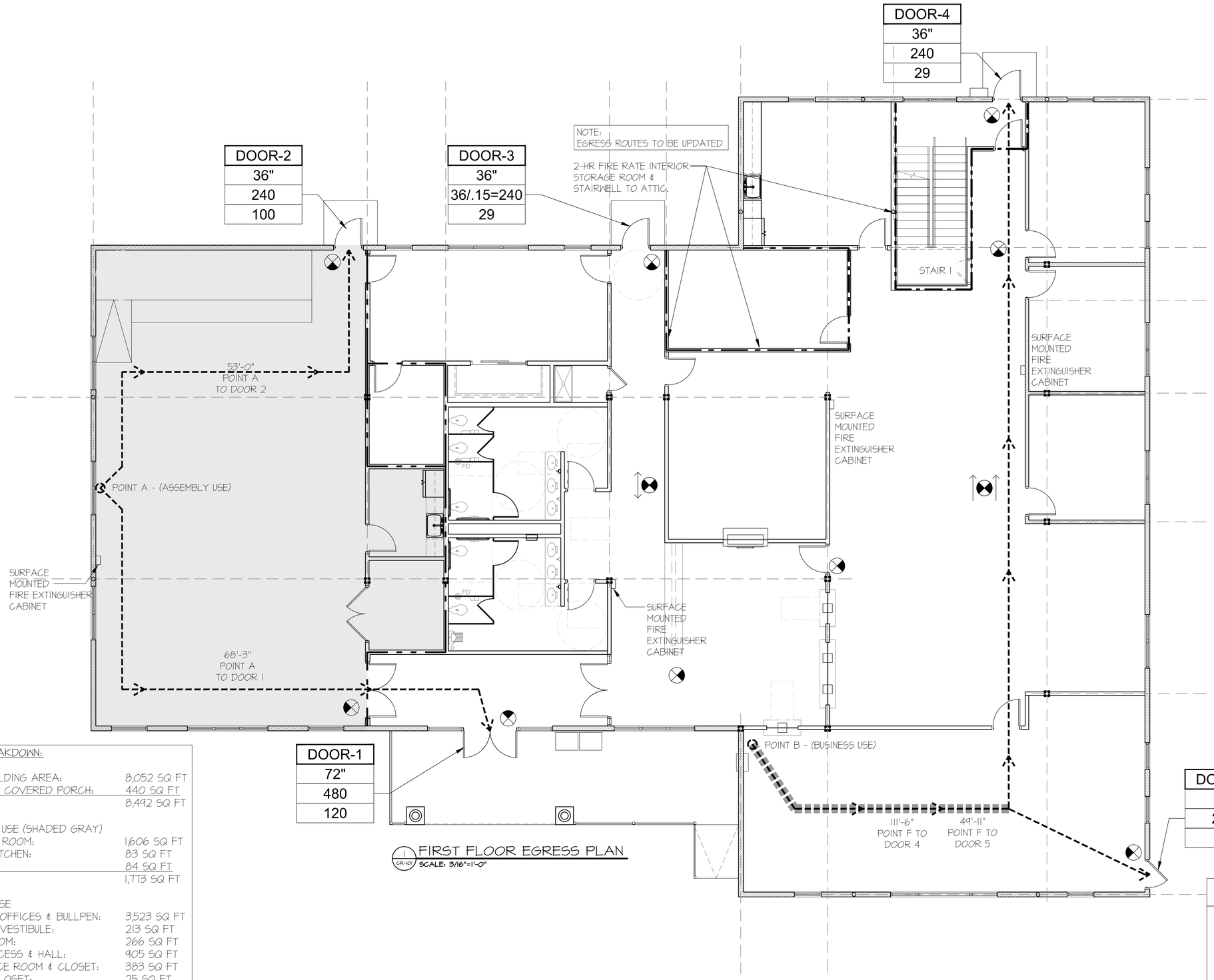


1 (CR-101) FIRST FLOOR EGRESS PLAN
SCALE: 3/16"=1'-0"

AREA BREAKDOWN:

| | |
|---|---|
| GROSS BUILDING AREA: | 8,052 SQ FT |
| PARTIALLY COVERED PORCH: | 440 SQ FT |
| TOTAL: | 8,492 SQ FT |
| ASSEMBLY USE (SHADED GRAY) | |
| ASSEMBLY ROOM: | 1,606 SQ FT |
| PANTRY KITCHEN: | 83 SQ FT |
| STORAGE: | 84 SQ FT |
| TOTAL: | 1,773 SQ FT |
| BUSINESS USE | |
| MUNICIPAL OFFICES & BULLPEN: | 3,523 SQ FT |
| ENTRANCE VESTIBULE: | 213 SQ FT |
| BREAK ROOM: | 266 SQ FT |
| PUBLIC ACCESS & HALL: | 905 SQ FT |
| CONFERENCE ROOM & CLOSET: | 383 SQ FT |
| JANITOR CLOSET: | 25 SQ FT |
| BATHROOMS: | 431 SQ FT |
| STORAGE: | 220 SQ FT |
| SERVER CLOSET: | 93 SQ FT |
| TOTAL: | 6,054 SQ FT |
| TOTAL NET AREA: | 7,832 SQ FT |

## LEGEND

- EXIT SIGN
- DOOR / 72" / 360 / 54 — EGRESS COMPONENT / EGRESS WIDTH / ALLOWABLE OCCUPANTS / ACTUAL OCCUPANTS
- EGRESS PATH
- COMMON PATH OF EGRESS
- 2-HR FIRE RATED ASSEMBLY

# BYRAM MUNICIPAL BUILDING ADMINISTRATIVE/CIVIL

LOCATED AT 10 MANSFIELD DRIVE
BLOCK 365 - LOT 16.01
BOROUGH OF BYRAM
SUSSEX COUNTY, NEW JERSEY


NADER house + design
THE NADER GROUP, LLC
Architects, Engineers & Surveyors
111 Mill Street
Hackettstown, NJ 07840
p. 908.850.3500 | f. 908.441.5803
e. wassim.nader@thenadergroup.com
www.naderhouseofdesign.com
CERTIFICATE OF AUTHORIZATION
Engineering & Survey
No. 24GA28213500
Architecture
No. 21AC00126800


CONSTRUCTION DOCUMENTS

| NO. | DATE | REVISION | CHK |
|---|---|---|---|
| 04 | 08/01/23 | BID SET | CHK |
| 03 | 05/01/23 | CLIENT REVISIONS | CHK |
| 02 | 07/28/22 | COORDINATION REVISIONS | CHK |
| 01 | 06/28/22 | TOWN COMMENTS | CHK |
| 00 | 05/06/22 | TOWN SUBMISSION | CHK |

DRAWN BY: CC, ES
SCALE: AS SHOWN
DATE: OCTOBER 5TH, 2020
JOB NO. 18TNG029C

FIRST FLOOR EGRESS PLAN

DRAWING NO.
CR-101-C

PLOT DATE: 2023-08-04

© 2023 NADER GROUP ASA, NADER HOUSE OF DESIGN

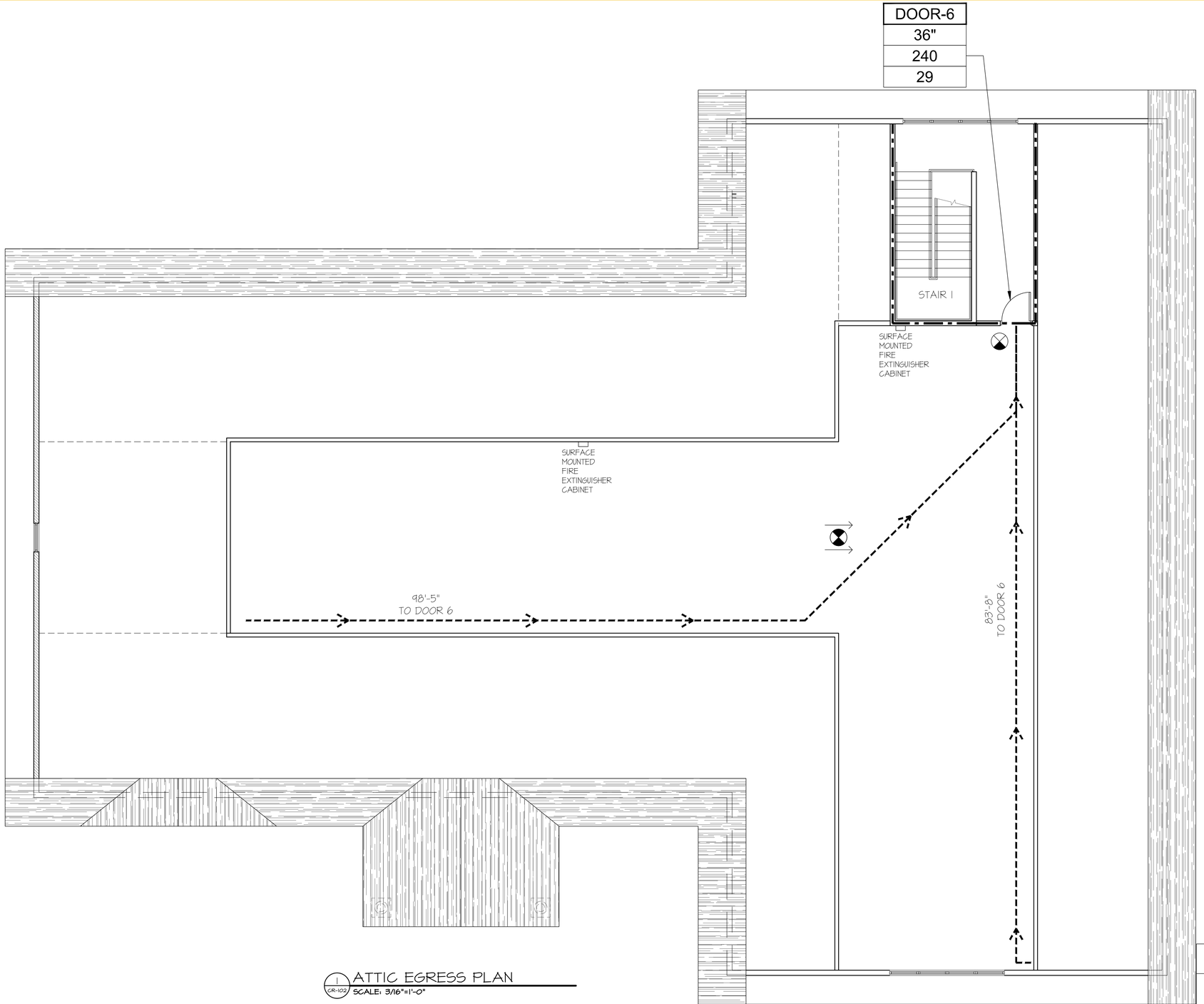


1 CR-102 ATTIC EGRESS PLAN
SCALE: 3/16"=1'-0"

AREA BREAKDOWN:

| | |
|---|---|
| GROSS BUILDING AREA: | 8,052 SQ FT |
| COMBINED USE NET AREA: | 7,832 SQ FT |
| USABLE ATTIC SPACE: | 2,644 SQ FT |
| TOTAL: | 2,644 SQ FT |

## LEGEND

EXIT SIGN

| | |
|---|---|
| DOOR | EGRESS COMPONENT |
| 72" | EGRESS WIDTH |
| 360 | ALLOWABLE OCCUPANTS |
| 54 | ACTUAL OCCUPANTS |

EGRESS PATH

COMMON PATH OF EGRESS

2-HR FIRE RATED ASSEMBLY

# BYRAM MUNICIPAL BUILDING ADMINISTRATIVE/CIVIL

LOCATED AT 10 MANSFIELD DRIVE
BLOCK 365 - LOT 16.01
BOROUGH OF BYRAM
SUSSEX COUNTY, NEW JERSEY

NADER house + design
THE NADER GROUP, LLC
Architects, Engineers & Surveyors
111 Mill Street
Hackettstown, NJ 07840
p. 908.850.3500 | f. 908.441.5803
e. wassim.nader@thenadergroup.com
www.naderhouseofdesign.com
CERTIFICATE OF AUTHORIZATION
Engineering & Survey
No. 24GA28213500
Architecture
No. 21AC00126800

CONSTRUCTION DOCUMENTS

| NO. | DATE | REVISION | CHK |
|---|---|---|---|
| 04 | 08/01/23 | BID SET | CHK |
| 03 | 05/01/23 | CLIENT REVISIONS | CHK |
| 02 | 07/28/22 | COORDINATION REVISIONS | CHK |
| 01 | 06/28/22 | TOWN COMMENTS | CHK |
| 00 | 05/06/22 | TOWN SUBMISSION | CHK |

DRAWN BY: CC, ES
SCALE: AS SHOWN
DATE: OCTOBER 5TH, 2020
JOB NO. 18TNG029C

ATTIC EGRESS PLAN

DRAWING NO.
CR-102-C

PLOT DATE: 2023-08-04

© 2023 NADER GROUP-ASA, NADER HOUSE OF DESIGN

# BATHROOM FIXTURES

603 Toilet and Bathing Rooms

603.1 **General.** Accessible toilet and bathing rooms shall comply with Section 603

603.2 Clearance.

603.2.1 **Turning Space.** A turning space complying with Section 304 shall be provided within the room. The required turning space shall not be provided within a toilet compartment.

603.2.2 **Door Swing.** Doors shall not swing into the clear floor space or clearance for any fixture.

Exceptions: 1. Doors to a toilet or bathing room for a single occupant, accessed only through a private office and not for common use or public use shall be permitted to swing into the clear floor space, provided the swing of the door can be reversed to comply with Section 603.2.2.

2. Where the room is for individual use and a clear floor space complying with Section 305.3 is provided within the room, beyond the arc of the door swing, the door shall not be required to comply with Section 603.2.2.

603.3 **Mirrors.** Where mirrors are located above lavatories, a mirror shall be located over the accessible lavatory and shall be mounted with the bottom edge of the reflecting surface 40 inches max. above the floor. Where mirrors are located above counters that do not contain lavatories the mirror shall be mounted with the bottom edge of the reflecting surface 40 inches max. above the floor.

EXCEPTION: Other than within Accessible dwelling or sleeping units, mirrors are not required over the lavatories or counters if a mirror is located within the same toilet or bathing room and mounted with the bottom edge of the reflecting surface 35 inches max. above the floor.

603.4 **Coat Hooks and Shelves.** Coat hooks shall be located within one of the reach ranges specified in section 308. Shelves shall be 40 inches minimum and 48 inches maximum above the floor.

604 Water Closets and Toilet Compartments

604.1 **General.** Accessible water closets and toilet compartments shall comply with Section 604. Compartments containing more than one plumbing fixture shall comply with Section 603. Wheelchair accessible compartments shall comply with Section 604.9. Ambulatory accessible compartments shall comply with section 604.10

EXCEPTIONS: Water closets and toilet compartments primarily for childrens use shall be permitted to comply with Section 604.10 as applicable.

604.2 **Location.** The water closet shall be located with a wall or partition to the rear and to one side. The centerline of the water closet shall be 16 inches (405 mm) minimum to 18 inches (455 mm) maximum from the side wall or partition. Water closets located in ambulatory accessible compartments specified in Section 604.10 shall have the centerline of the water closet 17 inches (430 mm) min. to 19 inches (485 mm) max. from the side wall or partition.

604.3 Clearance.

604.3.1 **Clearance Width.** Clearance around a water closet shall be 60 inches (1525 mm) minimum in width measured perpendicular from the side wall.

604.3.2 **Clearance depth.** Clearance around the water closet shall be 56 inches (1420 mm) minimum in depth measured perpendicular from the rear wall.

604.3.3 **Clearance Overlap.** The required clearance around the water closet shall be permitted to overlap the water closet, associated grab bars, paper dispensers, sanitary napkin receptacles, coat hooks, shelves, accessible routes, clear floor space at other fixtures and the turning space. No other fixtures or obstructions shall be within the required water closet clearance.

604.4 **Height.** The height of water closet seats shall be 17 inches (430 mm) minimum and 19 inches (485 mm) maximum above the floor, measured to the top of the seat. Seats shall not be srung to return to a lifted position.

EXCEPTION: A water closet in a toilet room for a single occupant, accessed only through a private office and not for common use or public use, shall not be required to comply with Section 604.4.

604.5 **Grab Bars.** Grab bars for water closets shall comply with Section 609 and shall be provided in accordance with Section 604.5.1 and 604.5.2. Grab bars shall be provided on the rear wall and on the side wall closest to the water closet.

Exceptions: 1. Grab bars are not required to be installed in a toilet room for a single occupant, accessed only through a private office and not for common use or public use, provided reinforcement has been installed in walls and located so as to permit the installation of grab bars complying with Section 604.5.

2. In detention or correction facilities, grab bars are not required to be installed in housing or holding cells or rooms that are specially designed without protrusions for purposes of suicide prevention.

604.5.1 **Fixed Side Wall Grab Bars.** Side wall grab bars shall be 42 inches (1065 mm) long minimum, located 12 inches (305 mm) maximum from the rear wall and extending 54 inches (1370 mm) minimum from the rear wall. Vertical grab bars shall be 18 inches (455 mm) long minimum and mounted with the bottom of the bar located between 33 inches (990 mm) and 41 inches (1040 mm) above the floor, and with the center line of the bar located between 34 inches (990 mm) and 41 inches (1040 mm) from the rear wall.

EXCEPTIONS: The vertical grab bar at water closets primarily for childrens use shall comply with Section 609.4.2

604.5.2 **Rear Wall Grab Bars.** The rear wall grab bar shall be 36 inches (915 mm) minimum in length, and extend from the centerline of the water closet 12 inches (305 mm) minimum on the side closest to the wall, and 24 inches (610 mm) minimum on the transfer side.

EXCEPTION: 1. The rear grab bar shall be permitted to be 24 inches (610 mm) minimum in length, centered on the water closet, where wall space does not permit a grab bar 36 inches (915 mm) minimum in length due to the location of a recessed fixture adjacent to the water closet.

604.6 **Flush Controls.** Flush controls shall be hand operated or automatic. Hand-operated flush controls shall comply with Section 309. Flush controls shall be located on the open side of the water closet.

EXCEPTION: In ambulatory accessible compartments complying with Section 604.10, flush controls shall be permitted to be located on either side of the water closet.

604.7 **Dispensers.** Toilet paper dispenser shall comply with Section 309.4. Where the dispenser is located above the grab bar, the outlet of the dispenser shall be located within an area 24 inches (610 mm) minimum and 36 inches (915 mm) maximum from the rear wall. Where the dispenser is located below the grab bar, the outlet of the dispenser shall be located within an area 24 inches (610 mm) minimum and 42 inches (1065 mm) maximum from the rear wall. The outlet of the dispenser shall be located 18 inches (455 mm) minimum and 48 inches (1220 mm) maximum above the floor. Dispenser shall comply with section 609.3

dispensers shall not be of a type that control delivery, or do not allow continuous paper flow.

604.8 **Coat Hooks and Shelves.** coat hooks provided within toilet compartments shall be 48 inches (1220 mm) maximum above the floor. shelves shall be 40 inches (1015 mm) minimum and 48 inches (1220 mm) maximum above the floor.

604.9 Wheelchair Accessible Compartments.

604.9.1 **General.** Wheelchair accessible compartments shall comply with Section 604.9.

604.9.2.1 **Minimum area.** The minimum area of a wheelchair accessible compartment shall be 60 inches (1525 mm) minimum in width measured perpendicular to the side wall, and 56 inches (1420 mm) minimum in depth for wall hung water closets, and 59 inches (1500 mm) minimum in depth for floor mounted water closets measured perpendicular to the rear wall.

604.9.2.2 **Compartment for children's use.** The minimum area of a wheelchair accessible compartment for primarily children's use shall be 60 inches (1525 mm) minimum in width measured perpendicular to the side wall, and 54 inches (1500 mm) minimum in depth for wall hung and floor mounted water closets measured perpendicular to the rear wall.

605 Urinals

605.1 **General.** Accessible urinals shall comply with Section 605.

605.2 **Height and Depth.** Urinals shall be of the stall type or shall be of the wall-hung type with the rim at 17 inches (430 mm) maximum above the floor.

Wall hung urinals shall be 13 ½ inches (345 mm) minimum in depth measured from the outer face of the urinal rim to the wall.

605.3 **Clear Floor Space.** A clear floor space complying with Section 305, positioned for forward approach shall be provided.

605.4 **Flush Controls.** Flush controls shall be hand operated or automatic. Hand operated flush controls shall comply with Section 309.

606 Lavatories and Sinks

606.1 **General.** Accessible lavatories and sinks shall comply within Section 606.

606.2 **Clear Floor Space.** A clear floor space complying with Section 305.3, positioned for forward approach, shall be provided. Knee and toe clearance complying with Section 306 shall be provided. The dip of the overflow shall not be considered in determining knee and toe clearances.

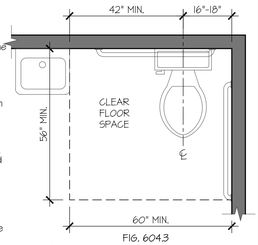


FIG. 604.3
ACCESSIBLE WATER CLOSET AND CLEARANCE

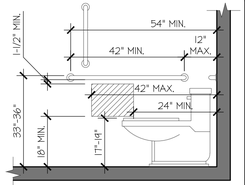


FIG. 604.4, 604.5.1, 604.7
WATER CLOSET HEIGHT, SIDE WALL GRAB BAR & DISPENSER LOCATION

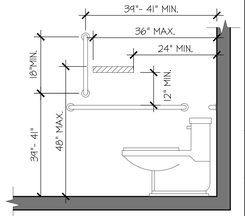


FIG. 604.4, 604.5.1, 604.7
WATER CLOSET HEIGHT, SIDE WALL GRAB BAR & DISPENSER LOCATION ABOVE GRAB BAR

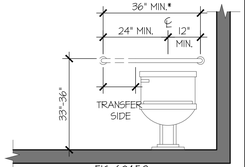


FIG. 604.5.2
REAR WALL GRAB BAR FOR WATER CLOSET
( * 24" MIN. CENTERED ON WATER CLOSET WHEN WALL SPACE DOES NOT PERMIT 36")

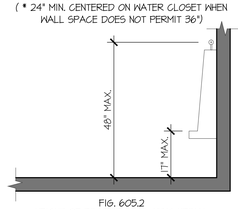


FIG. 605.2
HEIGHT OF RIM FOR WALL-HUNG URINAL

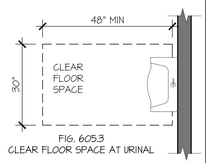


FIG. 605.3
CLEAR FLOOR SPACE AT URINAL

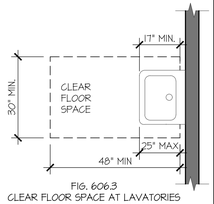


FIG. 606.3
CLEAR FLOOR SPACE AT LAVATORIES COMPLYING WITH SECTION 305.3

606.2 Clear Floor or Ground Space. (continued)

EXCEPTION:

1. A parallel approach complying with Section 305 shall be permitted to a kitchen sink in a space where a cook top or conventional range is not provided.
2. The requirement for knee and toe clearance shall not apply to a lavatory in a toilet and bathing facility for a single occupant, accessed only through a private office and not for common use or public use.
5. The requirement for knee and toe clearance shall not apply to more than one bowl of a multi-bowl sink.

606.3 **Height and Clearances.** The front of lavatories and sink shall be 34 inches (865 mm) maximum above the floor or ground, measured to the higher of the fixture rim or counter surface.

606.4 **Faucets.** Faucets shall comply with Section 309. Hand-operated, self-closing faucets shall remain open for 10 seconds minimum.

606.5 **Bowl Depth.** Sink shall be 6 1/2 inches (165 mm) deep maximum. Multiple compartment sinks shall have at least one compartment complying with this requirement.

606.6 **Exposed Pipes and Surfaces.** Water supply and drain pipes under lavatories and sink shall be insulated or otherwise configured to protect against contact. There shall be no sharp or abrasive surfaces under lavatories and sinks.

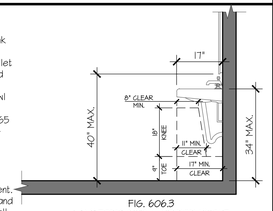


FIG. 606.3
LAVATORY, SINK & MIRROR HEIGHT AND KNEE & TOE CLEARANCE AS PER SEC. 306

# DRINKING FOUNDATIONS

602.1 **General.** Accessible drinking fountains shall comply with Section 602 & 307.

602.2 **Clear Floor Space.** A clear floor space complying with Section 305, positioned for a forward approach to the drinking fountain, shall be provided. Knee and toe space complying with Section 306 shall be provided. The clear floor space shall be centered on the drinking fountain.

Exceptions:

1. Drinking fountains for standing persons.
2. Drinking fountains primarily for children's use shall be permitted where the spout is 30 inches maximum above the floor, a parallel approach complying with Section 305 is provided and the clear floor space is centered on the drinking fountain.

602.4 **Spout Outlet Height.** Spout outlets of wheelchair accessible drinking fountains shall be 36 inches maximum above the floor. Spout outlets of drinking fountains for standing persons shall be 38 inches minimum and 43 inches maximum above the floor.

602.5 **Spout Location.** The spout shall be located 15 inches minimum from the vertical support and 5 inches maximum from the front edge of the drinking fountain, including bumpers. Where only a parallel approach is provided, the spout shall be located 3-1/2 inches maximum from the front edge of the drinking fountain, including bumpers.

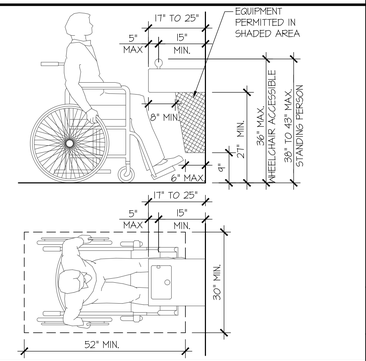


# DOORS AND DOORWAYS

404 DOORS AND DOORWAYS

404.1 **General.** Doors and doorways that are part of an accessible route shall comply with Section 404.

404.2 **Manual Doors.** Manual doors and doorways, and manual gates, including ticket gates, shall comply with the requirements of Section 404.2.

404.2.1 **Double-Leaf Doors and Gates.** At least one of the active leaves of doorways with two leaves shall comply with Sections 404.2.2 and 404.2.3.

404.2.2 **Clear Width.** Doorways shall have a clear opening width of 32 inches minimum. Clear opening width of doorways with swinging doors shall be measured between the face of the door and stop, with the door open 90 degrees. Openings more than 24 inches in depth at doors and doorways without doors shall provide a clear opening width of 36 inches minimum. There shall be no projections into the clear opening width lower than 34 inches above the floor. Projections into the clear opening width between 34 inches and 80 inches above the floor shall not exceed 4 inches.

EXCEPTIONS:

1. Door closers and door stops shall be permitted to be 78 inches minimum above floor.
2. In alterations, a projection of 5/8 inch maximum into the required clear opening width shall be permitted for the latch side stop.

404.2.3 **Maneuvering Clearances.** Minimum maneuvering clearances at doors shall comply with Section 404.2.3 and shall include the full clear opening width of the doorway. Required door maneuvering clearances shall not include knee and toe clearance.

404.2.3.1 **Floor Surface.** Floor surface within the maneuvering clearances shall have a slope not steeper than 1:48 and shall comply with section 302.

404.2.3.2 **Swinging Doors.** Swinging doors shall have maneuvering clearances complying with Table 404.2.3.2.

TABLE 404.2.3.2 - Maneuvering Clearances at Manual Swinging Doors

| TYPE OF USE | | MINIMUM CLEARANCES | | |
|---|---|---|---|---|
| APPROACH DIRECTION | DOOR SIDE | PERPENDICULAR TO DOOR | BEYOND LATCH PARALLEL TO DOOR | |
| From Front | Pull | 60 inches | 18 inches | |
| From Front | Push | 52 inches | 0 inches [4] | |
| From Hinge | Pull | 60 inches | 36 inches | |
| | Pull | 54 inches | 42 inches | |
| From Hinge | Push | 42 inches [1] | 22 inches [1,2,3] | |
| From Latch | Pull | 48 inches [1] | 24 inches | |
| From Latch | Push | 42 inches [2] | 24 inches | |

1. Add 6 inches if closer and latch provided
2. Add 6 inches if closer provided
3. Add 12 inches beyond latch if closer and latch provided
4. Beyond hinge side

404.2.3.3 **Sliding and Folding Doors.** Sliding doors and folding doors shall have maneuvering clearances complying with Table 404.2.3.3.

TABLE 404.2.3.3 - Maneuvering Clearances at Sliding & Folding Doors

| APPROACH DIRECTION | PERPENDICULAR TO DOORWAY | PARALLEL TO DOOR BEYOND STOP OR LATCH |
|---|---|---|
| From Front | 48 inches | 0 inches |
| From nonlatch side | 42 inches | 22 inches [1] |
| From latch side | 42 inches | 24 inches |

1. Beyond pocket or hinge side

404.2.4 **Thresholds.** If provided, thresholds at doorways shall be 1/2 inch (13 mm) maximum in height. Raised thresholds and changes in level at doorways shall comply with Sections 302 and 303.

EXCEPTION: An existing or altered threshold shall be permitted to be 3/4 inch (19 mm) maximum in height provided that the threshold has a beveled edge on each side with a maximum slope of 1:2 for the height exceeding 1/4 inch (6.4 mm).

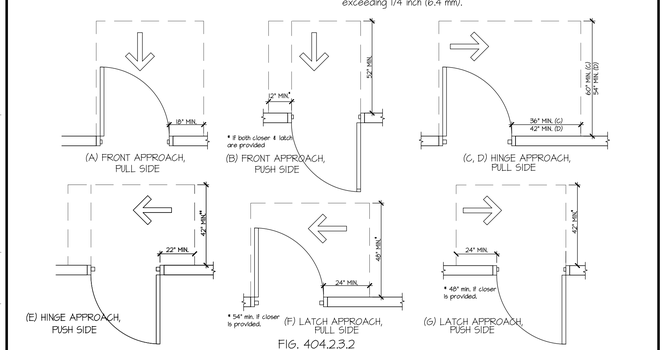


FIG. 404.2.3.2
MANEUVERING CLEARANCE AT MANUAL SWINGING DOORS

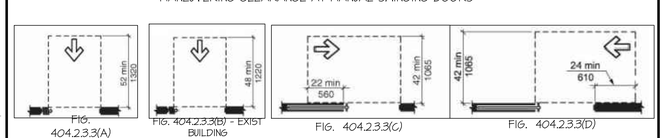


FIG. 404.2.3.3
MANEUVERING CLEARANCE AT SLIDING & FOLDING DOORS

# BATHROOM ISOMETRIC

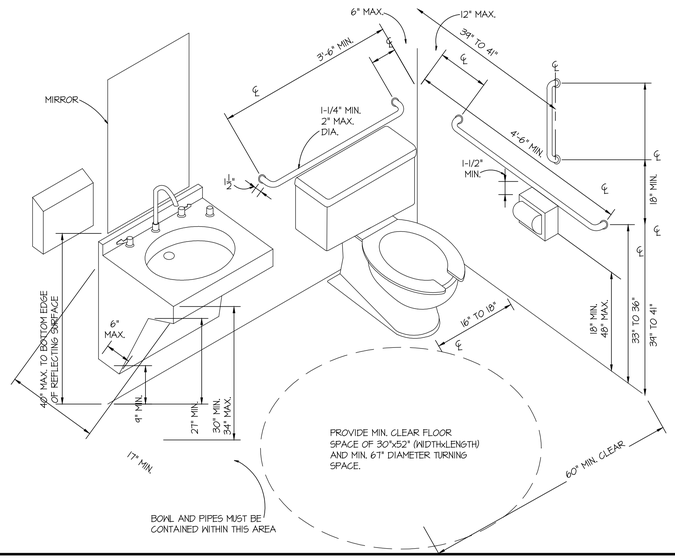


# WHEELCHAIR TURNING SPACE

304 Turning Space

304.1 **General.** A turning space shall comply with Section 304.

304.2 **Floor Surface.** Floor surfaces of a turning space shall comply with Section 302. Changes in level are not permitted withing the turning space.

Exception: Slopes not steeper than 1:48 and shall be permitted.

304.3 **Size.** Turning spaces shall comply with Section 304.3.1 or 304.3.2.

304.3.1 **Circular Space.** The turning space shall be a circular space with a 67-inches (1525 mm) minimum diameter. The turning space shall be permitted to include knee and toe clearance complying with Section 306.

304.3.2 **T-Shaped Space.** In new buildings and facilities, the turning space shall be a T-shaped space complying with one of the following:

1. A T-shaped space, clear of obstruction, that fits within an area 66 inches (1725 mm) wide and 60 inches (1525 mm) deep, with two arms and one base that are all 36 inches (915 mm) minimum in width. Each arm shall extend 16 inches (405 mm) minimum from each side of the base located opposite the other, and the base shall extend 24 inches (610 mm) minimum from the arms. At the intersection of each arm and the base, the interior corners shall be chamfered for 8 inches (205 mm) minimum along both the arm and along the base.
2. A T-shaped space, clear of obstruction, that fits within an area 64 inches (1625 mm) wide and 60 inches (1525 mm) deep, with two arms 36 inches (915 mm) minimum in width and a base 42 inches (1065 mm) minimum in width. Each arm shall extend 11 inches (280 mm) minimum from each side of the base, located opposite the other, and the base shall extend 22 inches (560 mm) minimum from each arm.
3. A T-shaped space, clear of obstruction, 64 inches (1625 mm) wide and 60 inches (1525 mm) deep, with two arms and one base 40 inches (1015 mm) minimum in width. Each arm shall extend 12 inches (305 mm) minimum from each side of the base and the base shall extend 20 inches (510 mm) minimum from each arm.

304.4 **Door Swing.** Unless otherwise specified, doors shall be permitted to swing into turning spaces.

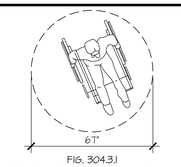


FIG. 304.3.1
SIZE OF WHEELCHAIR TURNING SPACE (A) CIRCULAR 67" DIA. SPACE

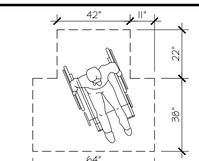


FIGURE 304.3.2.1(B)
T-SHAPED TURNING SPACE NEW BUILDINGS - OPTION 2

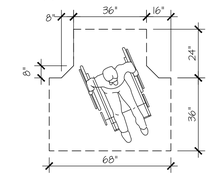


FIGURE 304.3.2.1(A)
T-SHAPED TURNING SPACE NEW BUILDINGS - OPTION 1

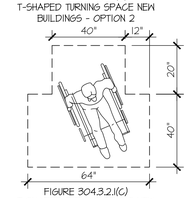


FIGURE 304.3.2.1(C)
T-SHAPED TURNING SPACE NEW BUILDINGS - OPTION 3

# REACH RANGES

308 Reach Ranges

308.2 Forward Reach.

308.2.1 **Unobstructed.** Where a forward reach is unobstructed, the high forward reach shall be 48 inches maximum and the low forward reach shall be 15 inches minimum above the floor.

308.2.2 **Obstructed High Reach.** Where a high forward reach is over an obstruction, the clear floor space complying with section 305 shall extend beneath the element for a distance not less than the required reach depth over the obstruction. The high forward reach shall be 48 inches maximum above the floor where the depth is 20 inches maximum. Where the depth exceeds 20 inches, the high forward reach shall be 44 inches maximum above the floor, and the reach depth shall be 25 inches maximum.

308.3 Side Reach.

308.3.1 **Unobstructed.** Where a clear floor space complying with section 305 allows a parallel approach to an element and the edge of the clear floor space is 10 inches maximum from the element, the high reach side shall be 48 inches maximum and the low side reach shall be 15 inches minimum above the floor. EXCEPTION: Existing elements that are not altered shall be permitted at 54 inches maximum above the floor.

308.3.2 **Obstructed High Reach.** Where a clear floor space complying with section 305 allows a parallel approach to an element and the high side reach is over an obstruction, the height of the obstruction shall be 34 inches maximum above the floor and the depth of the obstruction shall be 24 inches maximum. The high side reach shall be 48 inches maximum above the floor for a reach depth of 10 inches maximum. Where the reach depth exceeds 10 inches, the high side reach shall be 46 inches maximum above the floor for a reach depth of 24 inches maximum. Exception: At washing machines and clothes dryers, the height of the obstruction shall be permitted to be 36" maximum above the floor.

309 Operable Parts

309.2 **Clear Floor Space.** A clear floor space complying with Section 305 shall be provided.

309.3 **Height.** Operable parts shall be placed within one or more of the reach ranges specified in Section 308.

309.4 **Operation.** Operable parts shall be operable with one hand and shall not require tight grasping, pinching, or twisting of the wrist. The force required to activate operable parts shall be 5.0 pounds maximum.

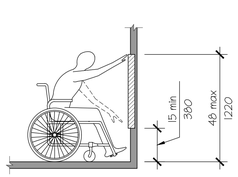


Fig. 308.2.1
Unobstructed Forward Reach

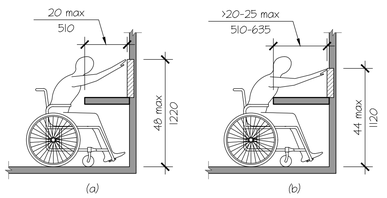


Fig. 308.2.2
Obstructed High Forward Reach

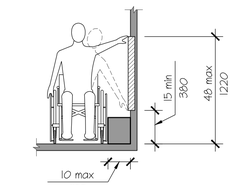


Fig. 308.3.1
Unobstructed Side Reach

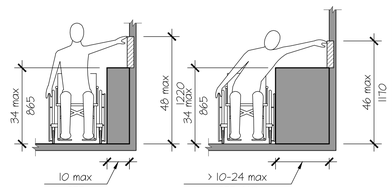


Fig. 308.3.2
Obstructed High Side Reach

**BYRAM MUNICIPAL BUILDING ADMINISTRATIVE/CIVIL**
**LOCATED AT 10 MANSFIELD DRIVE**
**BLOCK 365 - LOT 16.01**
**BOROUGH OF BYRAM**
**SUSSEX COUNTY, NEW JERSEY**


NADER house + design
THE NADER GROUP, LLC
Architects, Engineers & Surveyors
111 Mill Street
Hackettstown, NJ 07840
p. 908.850.3500 | f. 908.441.5803
e. wassim.nader@thenadergroup.com
www.naderhouseofdesign.com


CERTIFICATE OF AUTHORIZATION
Engineering & Survey
No. 24GA28213500
Architecture
No. 21AC00126800

CONSTRUCTION DOCUMENTS

| NO. | DATE | REVISION | CHK |
|---|---|---|---|
| 04 | 08/01/23 | BID SET | CHK |
| 03 | 05/01/23 | CLIENT REVISIONS | CHK |
| 02 | 07/28/22 | COORDINATION REVISIONS | CHK |
| 01 | 06/28/22 | TOWN COMMENTS | CHK |
| 00 | 05/06/22 | TOWN SUBMISSION | CHK |

DRAWN BY: CC, ES
SCALE: AS SHOWN
DATE: OCTOBER 5TH, 2020
JOB NO. 18TNG029C

ICC A117.1-2017
COMMERCIAL ACCESSIBILITY DETAILS & NOTES

DRAWING NO.
HC-100-C

PLOT DATE: 2023-08-03

© 2023 NADER GROUP-ASA, NADER HOUSE OF DESIGN

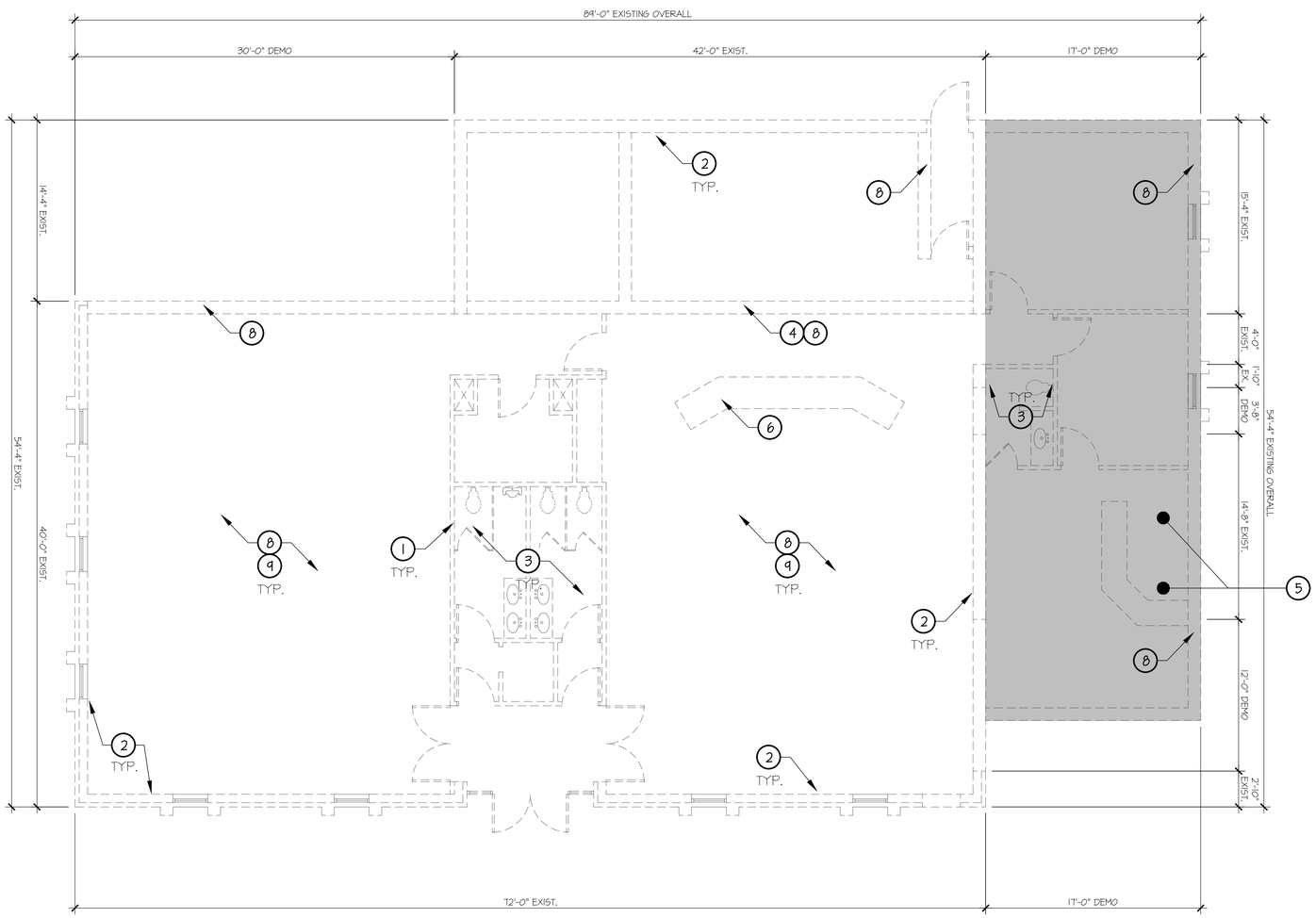


1 D-100 DEMO PLAN
SCALE: 3/16"=1'-0"

## DEMOLITION LEGEND

| | |
|---|---|
| ═══ | EXISTING TO REMAIN |
| = = = | EXISTING TO BE REMOVED |

## DEMO KEY NOTES

| | |
|---|---|
| 1 | REMOVE INTERIOR WALLS & FINISH AS INDICATED. DO NOT REMOVE ANY LOAD BEARING PARTITIONS WITHOUT PROVIDING PROPER SHORING. |
| 2 | REMOVE EXTERIOR WALLS, FOUNDATION AND FOOTING TO REMAIN. |
| 3 | REMOVE & CAP ALL EXIST. PLUMBING FIXTURES, LINES & COMPONENTS THROUGHOUT WORK AREA. |
| 4 | INTENTIONALLY LEFT BLANK |
| 5 | REMOVE EXISTING FOOTINGS AND FOUNDATION WALLS. |
| 6 | REMOVE EXISTING BUILT-IN FURNITURE |
| 7 | INTENTIONALLY LEFT BLANK |
| 8 | REMOVE ALL INTERIOR FINISHES INCLUDING EXISTING CEILING PANELS, GRIDS, AND LIGHT FIXTURES, FLOORING, TRIM, ETC. |
| 9 | REMOVE ALL EXISTING HVAC, ELECTRICAL, PLUMBING LINES AND VENTS. |
| | |

## GENERAL DEMO NOTES:

NOTES: ALL DEMOLITION AS LISTED OR AS REQUIRED BY THE DRAWINGS AND SPECIFICATIONS SHALL BE THE RESPONSIBILITY OF THE GENERAL CONTRACTOR UNLESS OTHERWISE INDICATED.

A. CONTRACTOR SHALL DEMOLISH AND REMOVE ALL ITEMS AS INDICATED ON THE DRAWINGS AND IN THE SPECIFICATIONS. CONTRACTOR SHALL BE RESPONSIBLE FOR ANY DEMOLITION AND /OR REMOVALS NOT SPECIFICALLY CALLED FOR ON THE DRAWINGS AND SPECIFICATIONS, BUT REQUIRED TO ACHIEVE THE FINAL DESIGN INTENT AS DELINEATED ON THE DRAWINGS AND SPECIFICATIONS. IT IS ALSO THE INTENT THAT THESE BUILDING ELEMENTS AND SYSTEMS BE REMOVED COMPLETELY WHETHER THEY INTERFERE WITH THE NEW INSTALLATION OR NOT. IT IS THE CONTRACTORS RESPONSIBILITY TO ASCERTAIN FOR THEMSELVES EXISTING CONDITIONS AT THE BUILDING PRIOR TO THE BID. NO ALLOWANCES FOR ADDITIONAL CLAIMS WILL BE ENTERTAINED REGARDING THIS MATTER.

B. CONTRACTOR SHALL BE RESPONSIBLE FOR REMOVING ALL EXISTING DEBRIS IN THE CONTRACT AREA AND ALL DEBRIS CAUSED BY DEMOLITION. CONTRACTOR SHALL NOT ALLOW AN EXCESS AMOUNT OF DEBRIS TO ACCUMULATE AT ANY TIME, WHICH MAY REDUCE OR ENDANGER STRUCTURAL CAPACITY OR SAFETY OF THE OCCUPANTS.

C. THE GENERAL CONTRACTOR SHALL BE RESPONSIBLE FOR REMOVING EXISTING MECHANICAL AND ELECTRICAL EQUIPMENT AS REQUIRED BY THE CONTRACT DOCUMENTS. THE GENERAL CONTRACTOR SHALL COORDINATE ALL MECHANICAL AND ELECTRICAL DEMOLITION WITH EACH TRADE WHETHER IT BE PRIME OR SUBCONTRACTOR.

D. CONTRACTOR SHALL PROTECT ALL EXISTING CONSTRUCTION TO REMAIN FROM DAMAGE DURING DEMOLITION AT ALL TIMES.

E. CONTRACTOR SHALL PATCH AND/OR REPAIR ALL EXISTING ADJACENT CONSTRUCTION AS MAY BE REQUIRED AFTER DEMOLITION TO PROVIDE A COMPLETE FINISHED INSTALLATION.

F. CONTRACTOR SHALL REMOVE ALL EXISTING CEILING SYSTEMS (ACOUSTICAL, GYPSUM BOARD, TILE, ETC.) AND SUPPORTS UNLESS INDICATED TO REMAIN.

G. ALL MATERIAL AND EQUIPMENT REMOVED FROM THE BUILDING SHALL BE DISPOSED OF LEGALLY BY THE CONTRACTOR (EXCEPT AS REQUESTED BY THE OWNER AND ARCHITECT).

CONTRACTOR SHALL VERIFY STRUCTURAL STABILITY OF BUILDING PRIOR TO COMMENCING DEMOLITION. DO NOT REMOVE ANY STRUCTURAL BEARING MEMBERS WITHOUT PROVIDING PROPER SHORING.

NOTE: DEMO DRAWINGS BASED OFF OF 1971 ARCHITECTURAL SET. CONTRACTOR TO FIELD VERIFY AND NOTIFY ARCHITECT IF DISCREPANCY IS FOUND.

# BYRAM MUNICIPAL BUILDING ADMINISTRATIVE/CIVIL

LOCATED AT 10 MANSFIELD DRIVE
BLOCK 365 - LOT 16.01
BOROUGH OF BYRAM
SUSSEX COUNTY, NEW JERSEY

NADER house + design
THE NADER GROUP, LLC
Architects, Engineers & Surveyors
111 Mill Street
Hackettstown, NJ 07840
p. 908.850.3500 | f. 908.441.5803
e. wassim.nader@thenadergroup.com
www.naderhouseofdesign.com
CERTIFICATE OF AUTHORIZATION
Engineering & Survey
No. 24GA28213500
Architecture
No. 21AC00126800

CONSTRUCTION DOCUMENTS

| NO. | DATE | REVISION | CHK |
|---|---|---|---|
| 04 | 08/01/23 | BID SET | CHK |
| 03 | 05/01/23 | CLIENT REVISIONS | CHK |
| 02 | 07/28/22 | COORDINATION REVISIONS | CHK |
| 01 | 06/28/22 | TOWN COMMENTS | CHK |
| 00 | 05/06/22 | TOWN SUBMISSION | CHK |

DRAWN BY: CC, ES
SCALE: AS SHOWN
DATE: OCTOBER 5TH, 2020
JOB NO. 18TNG029C

DEMO PLAN

DRAWING NO. D-100-C

PLOT DATE: 2023-08-04

© 2023 NADER GROUP ASA, NADER HOUSE OF DESIGN

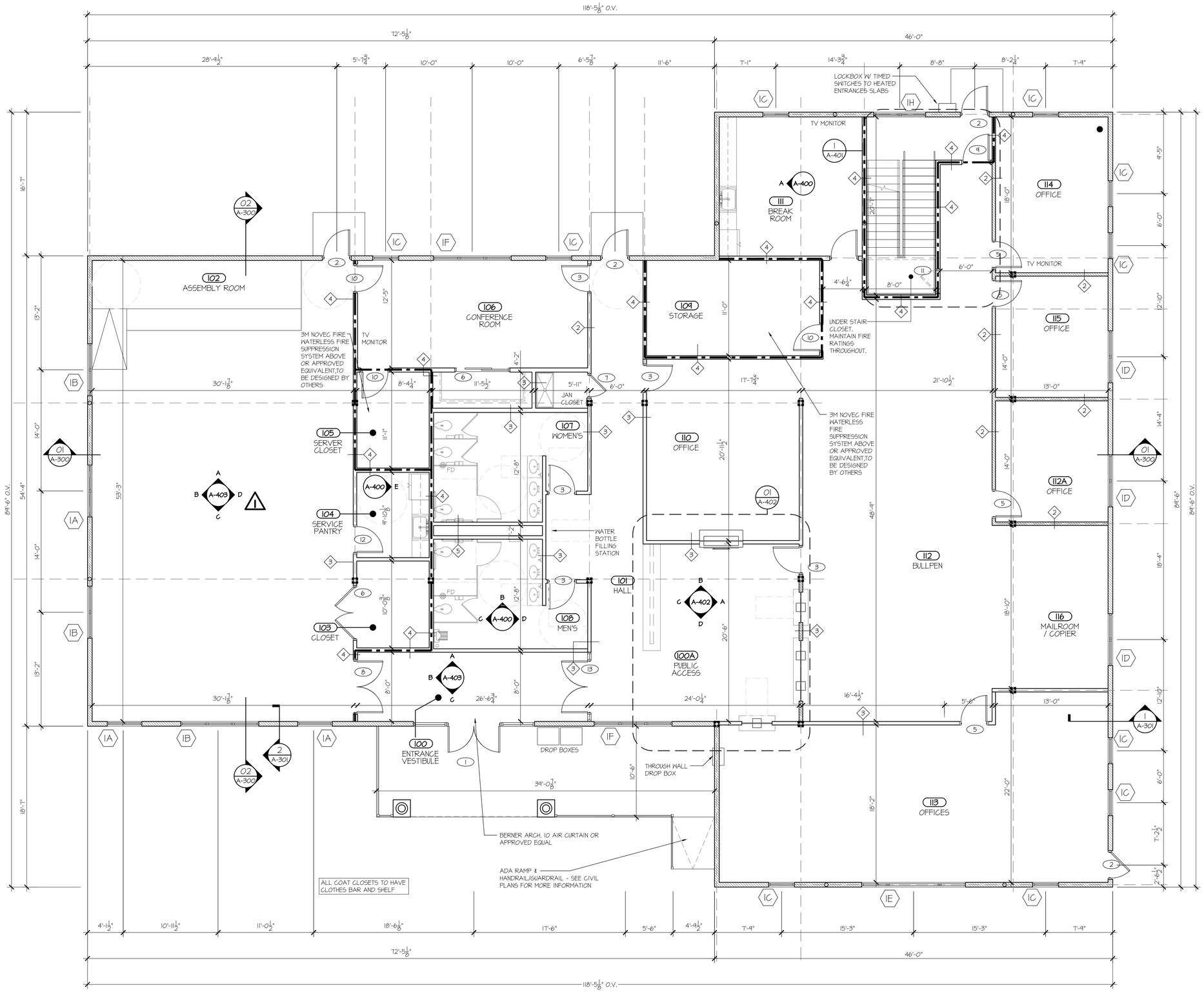


1 A-100 GROUND FLOOR PLAN
SCALE: 3/16"=1'-0"

## WALL TYPE LEGEND

- 2-HR FIRE RATED WALL
- NEW WALL
- NEW MASONRY WALL

# BYRAM MUNICIPAL BUILDING ADMINISTRATIVE/CIVIL

LOCATED AT 10 MANSFIELD DRIVE
BLOCK 365 - LOT 16.01
BOROUGH OF BYRAM
SUSSEX COUNTY, NEW JERSEY


NADER house+design
THE NADER GROUP, LLC
Architects, Engineers & Surveyors
111 Mill Street
Hackettstown, NJ 07840
p. 908.850.3500 | f. 908.441.5803
e. wassim.nader@thenadergroup.com
www.naderhouseofdesign.com
CERTIFICATE OF AUTHORIZATION
Engineering & Survey
No. 24GA28213500
Architecture
No. 21AC00126800


CONSTRUCTION DOCUMENTS

| NO. | DATE | REVISION | CHK |
|---|---|---|---|
| 04 | 08/01/23 | BID SET | CHK |
| 03 | 05/01/23 | CLIENT REVISIONS | CHK |
| 02 | 07/28/22 | COORDINATION REVISIONS | CHK |
| 01 | 06/28/22 | TOWN COMMENTS | CHK |
| 00 | 05/06/22 | TOWN SUBMISSION | CHK |

DRAWN BY: CC, ES
SCALE: AS SHOWN
DATE: OCTOBER 5TH, 2020
JOB NO. 18TNG029C

GROUND FLOOR PLAN

DRAWING NO. A-100-C

PLOT DATE: 2023-08-04

© 2023 NADER GROUP ASA, NADER HOUSE OF DESIGN

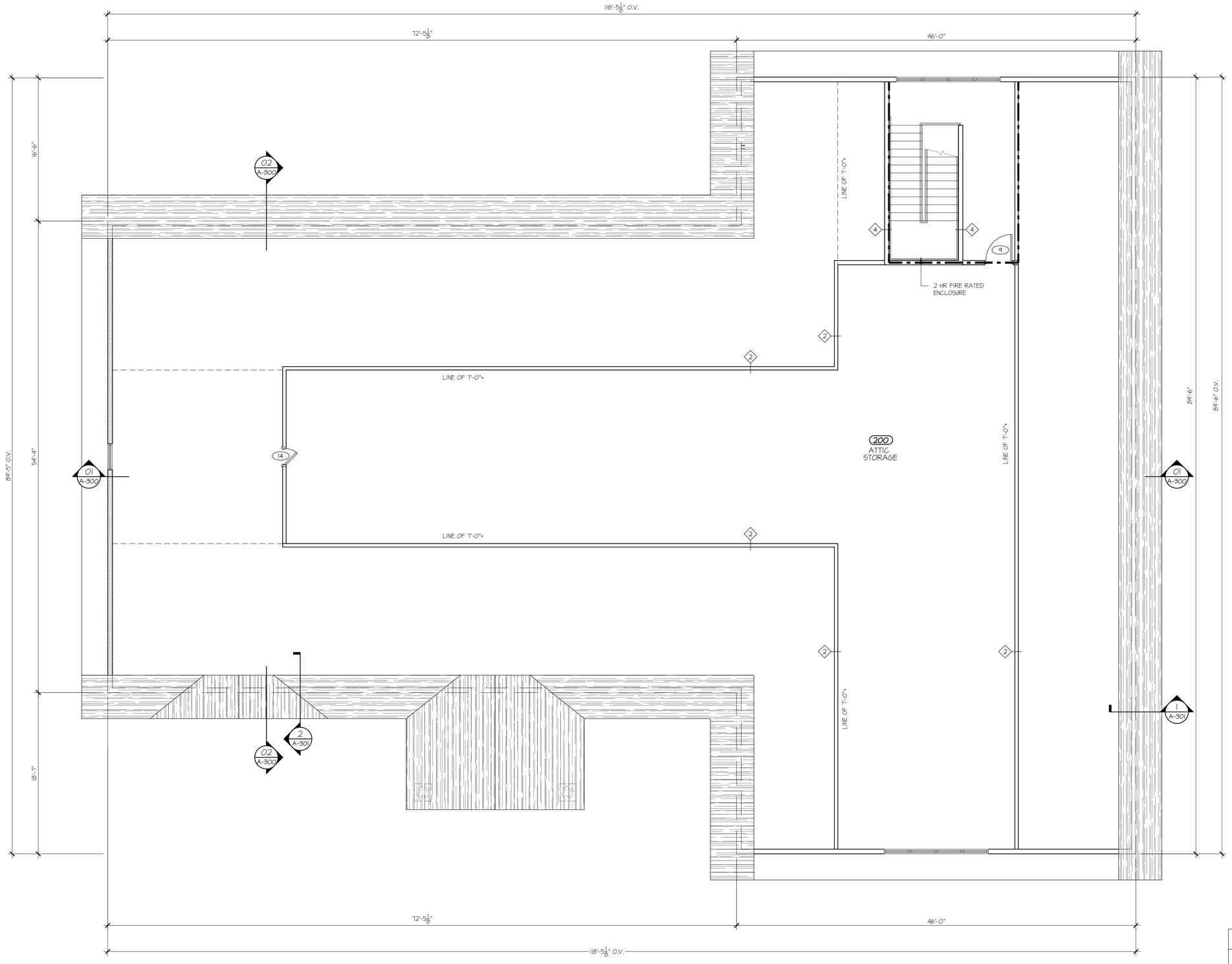


1 A-101 ATTIC PLAN
SCALE: 3/16"=1'-0"

## WALL TYPE LEGEND

- 2-HR FIRE RATED WALL
- NEW WALL
- NEW MASONRY WALL

# BYRAM MUNICIPAL BUILDING ADMINISTRATIVE/CIVIL

LOCATED AT 10 MANSFIELD DRIVE
BLOCK 365 - LOT 16.01
BOROUGH OF BYRAM
SUSSEX COUNTY, NEW JERSEY


NADER house+design
THE NADER GROUP, LLC
Architects, Engineers & Surveyors
111 Mill Street
Hackettstown, NJ 07840
p. 908.850.3500 | f. 908.441.5803
e. wassim.nader@thenadergroup.com
www.naderhouseofdesign.com
CERTIFICATE OF AUTHORIZATION
Engineering & Survey
No. 24GA28213500
Architecture
No. 21AC00126800


CONSTRUCTION DOCUMENTS

| NO. | DATE | REVISION | CHK |
|---|---|---|---|
| 04 | 08/01/23 | BID SET | CHK |
| 03 | 05/01/23 | CLIENT REVISIONS | CHK |
| 02 | 07/28/22 | COORDINATION REVISIONS | CHK |
| 01 | 06/28/22 | TOWN COMMENTS | CHK |
| 00 | 05/06/22 | TOWN SUBMISSION | CHK |

DRAWN BY: CC, ES
SCALE: AS SHOWN
DATE: OCTOBER 5TH, 2020
JOB NO. 18TNG029C

ATTIC PLAN

DRAWING NO.
A-101-C

PLOT DATE: 2023-08-04

© 2023 NADER GROUP ASA, NADER HOUSE OF DESIGN

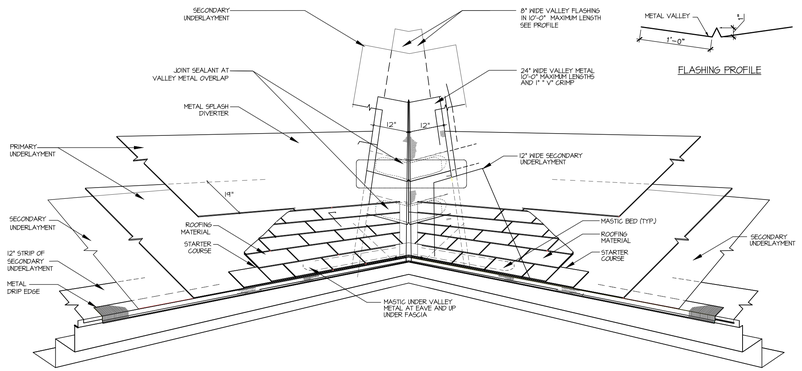


2 A-102 TYP. GABLE ROOF DETAIL
SCALE: NTS

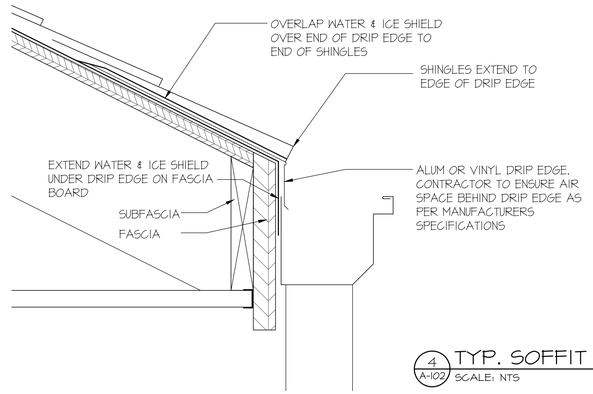


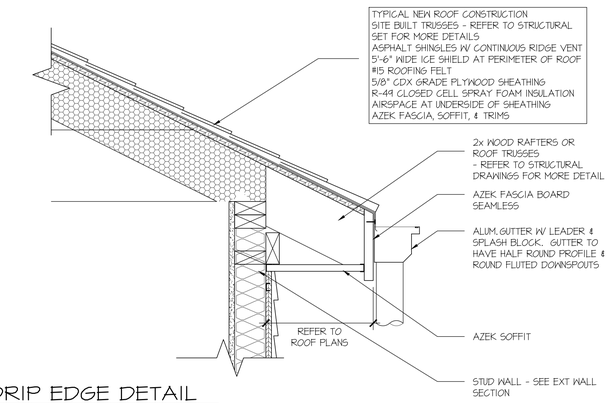


4 A-102 TYP. SOFFIT & DRIP EDGE DETAIL
SCALE: NTS

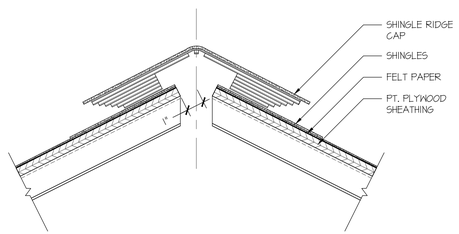


3 A-102 TYP. RIDGE VENT DETAIL
SCALE: NTS

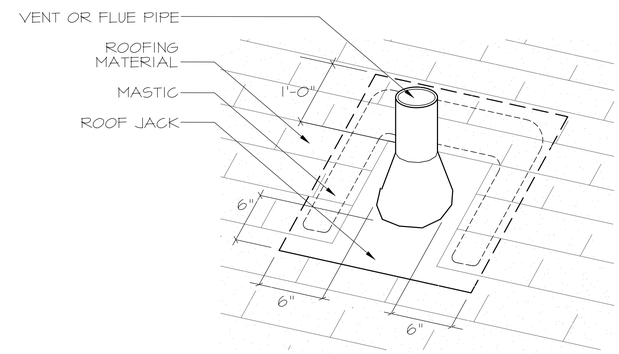


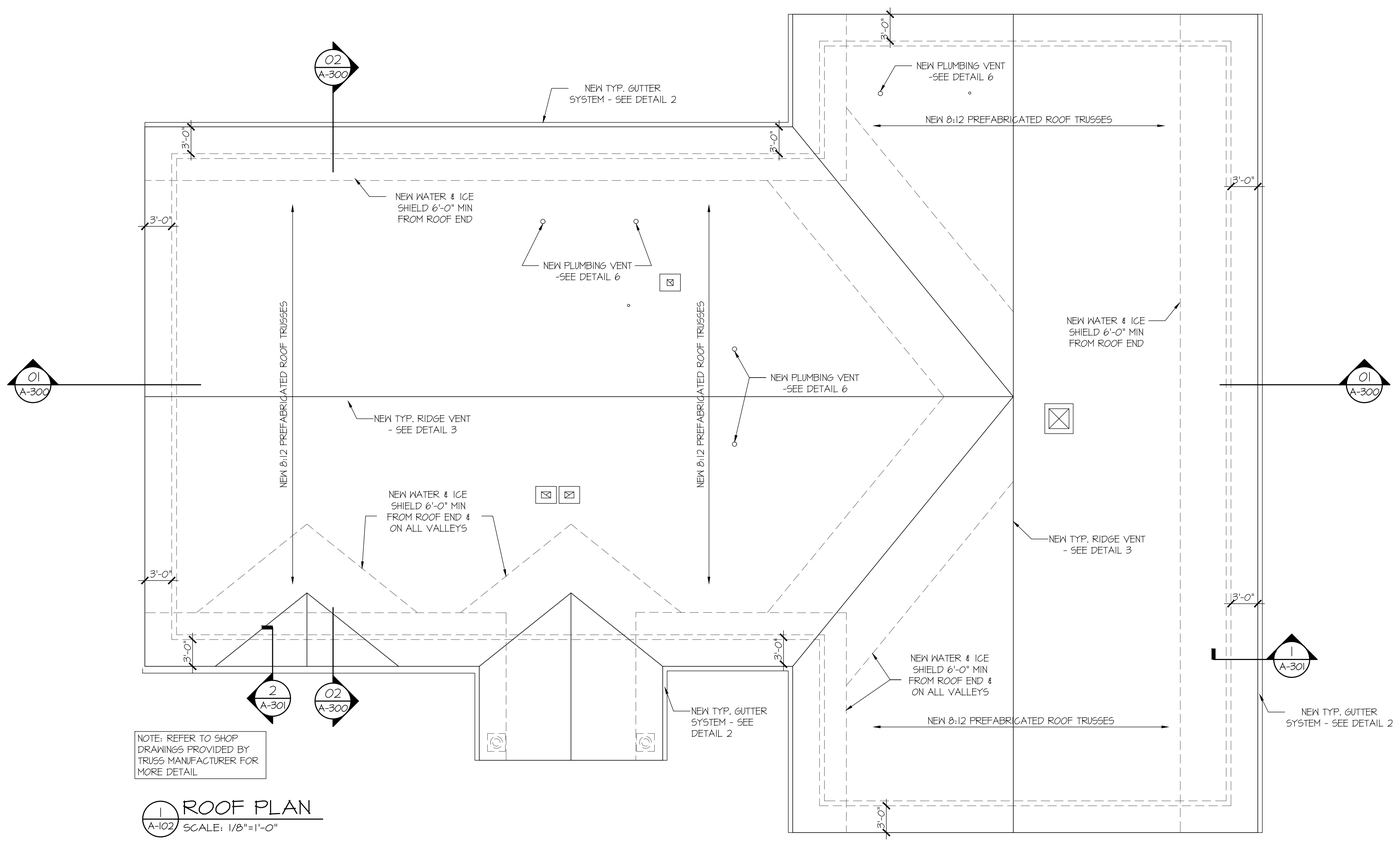


NOTE: REFER TO SHOP DRAWINGS PROVIDED BY TRUSS MANUFACTURER FOR MORE DETAIL

1 A-102 ROOF PLAN
SCALE: 1/8"=1'-0"

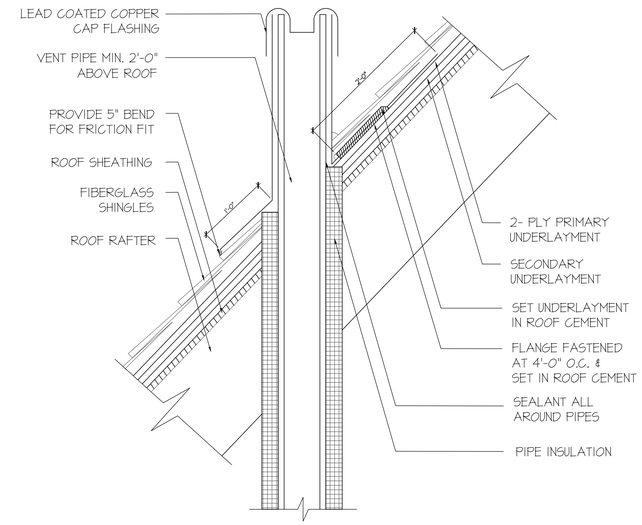


5 A-102 TYP. VENT PENETRATION DETAIL
SCALE: NTS

# BYRAM MUNICIPAL BUILDING ADMINISTRATIVE/CIVIL

LOCATED AT 10 MANSFIELD DRIVE
BLOCK 365 - LOT 16.01
BOROUGH OF BYRAM
SUSSEX COUNTY, NEW JERSEY

NADER house + design
THE NADER GROUP, LLC
Architects, Engineers & Surveyors
111 Mill Street
Hackettstown, NJ 07840
p. 908.850.3500 | f. 908.441.5803
e. wassim.nader@thenadergroup.com
www.naderhouseofdesign.com
CERTIFICATE OF AUTHORIZATION
Engineering & Survey
No. 24GA28213500
Architecture
No. 21AC00126800

CONSTRUCTION DOCUMENTS

| NO. | DATE | REVISION | CHK |
|---|---|---|---|
| 04 | 08/01/23 | BID SET | CHK |
| 03 | 05/01/23 | CLIENT REVISIONS | CHK |
| 02 | 07/28/22 | COORDINATION REVISIONS | CHK |
| 01 | 06/28/22 | TOWN COMMENTS | CHK |
| 00 | 05/06/22 | TOWN SUBMISSION | CHK |

DRAWN BY: CC, ES
SCALE: AS SHOWN
DATE: OCTOBER 5TH, 2020
JOB NO. 18TNG029C

ROOF PLAN & DETAILS

DRAWING NO.
A-102-C

PLOT DATE: 2023-08-04

© 2023 NADER GROUP ASA, NADER HOUSE OF DESIGN

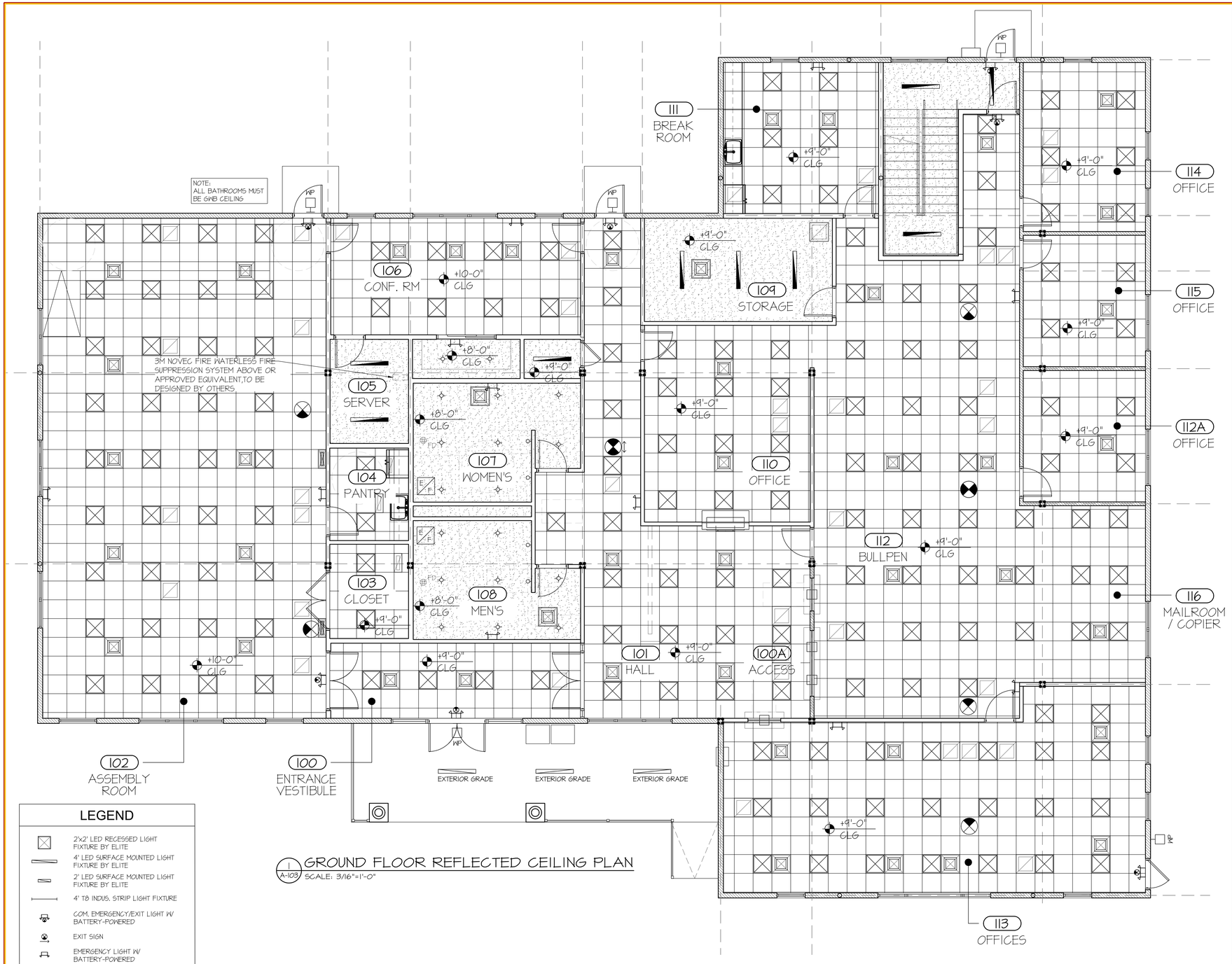


1 A-103 GROUND FLOOR REFLECTED CEILING PLAN
SCALE: 3/16"=1'-0"

## LEGEND

- 2'x2' LED RECESSED LIGHT FIXTURE BY ELITE
- 4' LED SURFACE MOUNTED LIGHT FIXTURE BY ELITE
- 2' LED SURFACE MOUNTED LIGHT FIXTURE BY ELITE
- 4' T8 INDUS. STRIP LIGHT FIXTURE
- COM. EMERGENCY/EXIT LIGHT W/ BATTERY-POWERED
- EXIT SIGN
- EMERGENCY LIGHT W/ BATTERY-POWERED
- CFL RECESSED DOWNLIGHT
- HARD WIRED LED STROBE SMOKE ALARM
- EXT. WALL MOUNTED EMERGENCY LIGHT FIXTURE
- EXHAUST FAN
- HVAC DIFFUSER
- RETURN AIR DIFFUSER
- 2X2 ACT CEILING GRID, ARMSTRONG LYRA FB VECTOR OR APPROVED CONCEALED GRID EQUAL.
- GYPSUM WALL BOARD CEILING - REQUIRED IN BOTH BATHROOMS

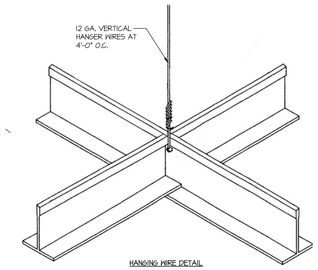


HANGING WIRE DETAIL

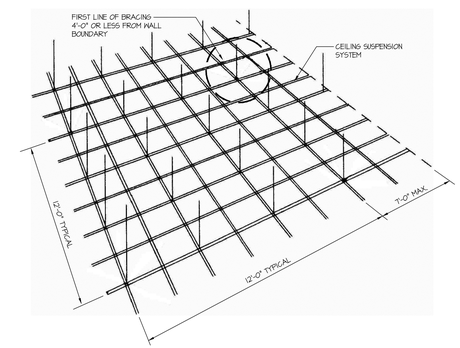


3 A-102 TYP. DROPPED ACT CEILING DETAIL
SCALE: 3/16"=1'-0"

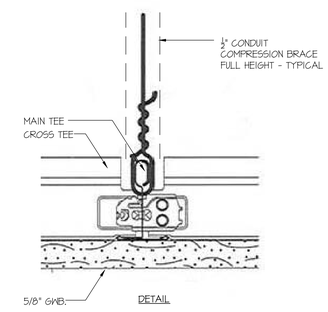


DETAIL

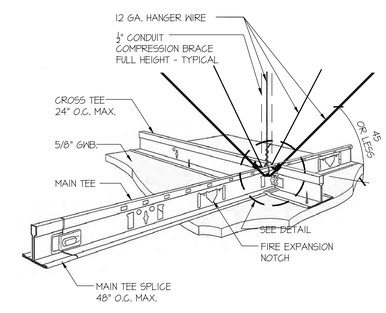


2 A-102 TYP. DROPPED GWB CEILING DETAIL
SCALE: 3/16"=1'-0"

# BYRAM MUNICIPAL BUILDING ADMINISTRATIVE/CIVIL

LOCATED AT 10 MANSFIELD DRIVE
BLOCK 365 - LOT 16.01
BOROUGH OF BYRAM
SUSSEX COUNTY, NEW JERSEY

NADER house+design
THE NADER GROUP, LLC
Architects, Engineers & Surveyors
111 Mill Street
Hackettstown, NJ 07840
p. 908.850.3500 | f. 908.441.5803
e. wassim.nader@thenadergroup.com
www.naderhouseofdesign.com
CERTIFICATE OF AUTHORIZATION
Engineering & Survey
No. 24GA28213500
Architecture
No. 21AC00126800

CONSTRUCTION DOCUMENTS

| NO. | DATE | REVISION | CHK |
|---|---|---|---|
| 04 | 08/01/23 | BID SET | CHK |
| 03 | 05/01/23 | CLIENT REVISIONS | CHK |
| 02 | 07/28/22 | COORDINATION REVISIONS | CHK |
| 01 | 06/28/22 | TOWN COMMENTS | CHK |
| 00 | 05/06/22 | TOWN SUBMISSION | CHK |

DRAWN BY: CC, ES
SCALE: AS SHOWN
DATE: OCTOBER 5TH, 2020
JOB NO. 18TNG029C

GROUND FLOOR REFLECTED CEILING PLANS

DRAWING NO.
A-103-C

PLOT DATE: 2023-08-04

© 2023 NADER GROUP-ASA, NADER HOUSE OF DESIGN

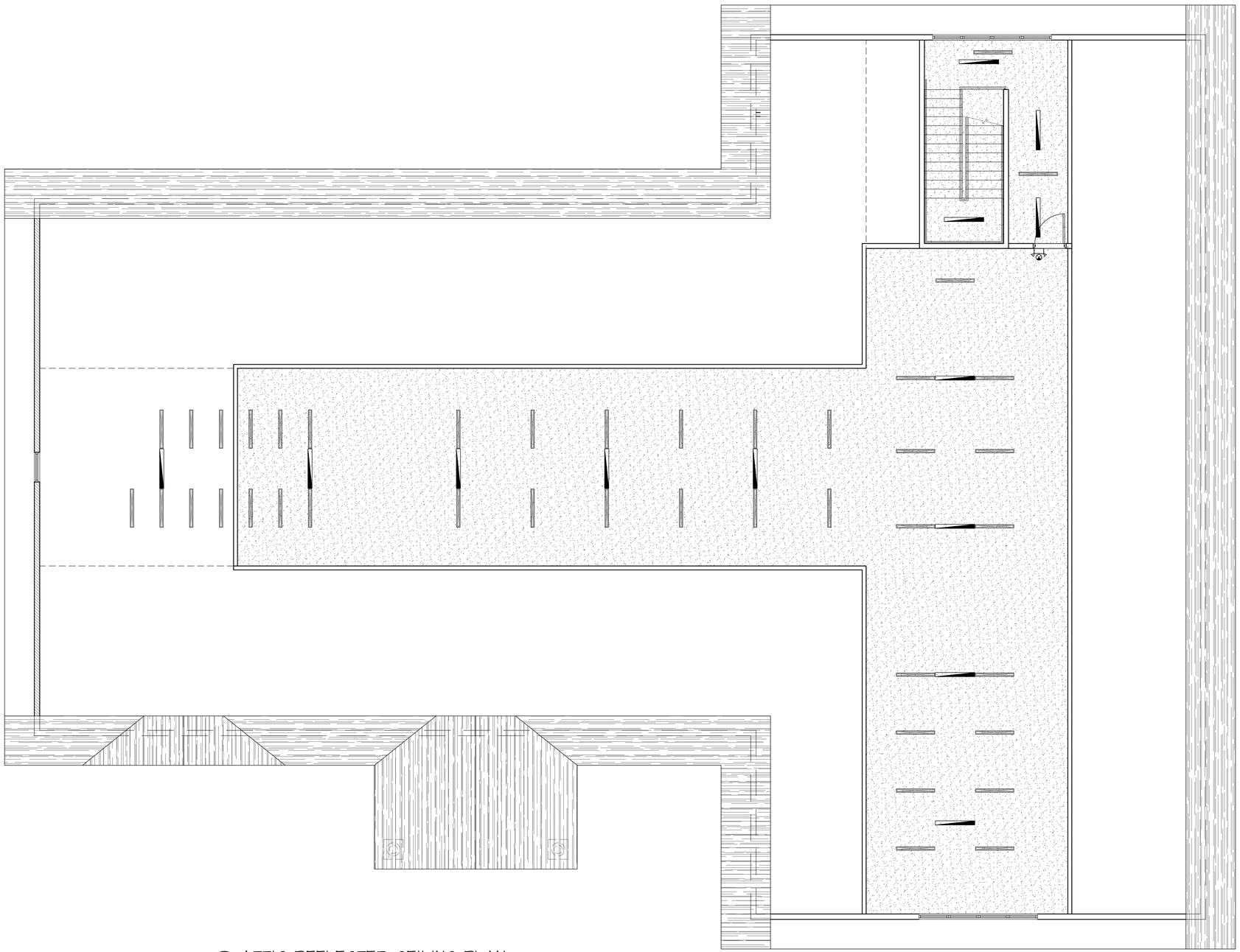

1 A-104 ATTIC REFLECTED CEILING PLAN
SCALE: 3/16"=1'-0"

## LEGEND

- 2'x2' LED RECESSED LIGHT FIXTURE BY ELITE
- 4' LED SURFACE MOUNTED LIGHT FIXTURE BY ELITE
- 2' LED SURFACE MOUNTED LIGHT FIXTURE BY ELITE
- 4' T8 INDUS. STRIP LIGHT FIXTURE
- COM. EMERGENCY/EXIT LIGHT W/ BATTERY-POWERED
- EXIT SIGN
- EMERGENCY LIGHT W/ BATTERY-POWERED
- CFL RECESSED DOWNLIGHT
- HARD WIRED LED STROBE SMOKE ALARM
- EXT. WALL MOUNTED EMERGENCY LIGHT FIXTURE
- EXHAUST FAN
- HVAC DIFFUSER
- RETURN AIR DIFFUSER
- 2X2 ACT CEILING GRID, ARMSTRONG LYRA PB VECTOR OR APPROVED CONCEALED GRID EQUAL.
- GYPSUM WALL BOARD CEILING - REQUIRED IN BOTH BATHROOMS

# BYRAM MUNICIPAL BUILDING ADMINISTRATIVE/CIVIL

LOCATED AT 10 MANSFIELD DRIVE
BLOCK 365 - LOT 16.01
BOROUGH OF BYRAM
SUSSEX COUNTY, NEW JERSEY


NADER house+design
THE NADER GROUP, LLC
Architects, Engineers & Surveyors
111 Mill Street
Hackettstown, NJ 07840
p. 908.850.3500 | f. 908.441.5803
e. wassim.nader@thenadergroup.com
www.naderhouseofdesign.com


CERTIFICATE OF AUTHORIZATION
Engineering & Survey
No. 24GA28213500
Architecture
No. 21AC00126800

CONSTRUCTION DOCUMENTS

| NO. | DATE | REVISION | CHK |
|---|---|---|---|
| 04 | 08/01/23 | BID SET | CHK |
| 03 | 05/01/23 | CLIENT REVISIONS | CHK |
| 02 | 07/28/22 | COORDINATION REVISIONS | CHK |
| 01 | 06/28/22 | TOWN COMMENTS | CHK |
| 00 | 05/06/22 | TOWN SUBMISSION | CHK |

DRAWN BY: CC, ES
SCALE: AS SHOWN
DATE: OCTOBER 5TH, 2020
JOB NO. 18TNG029C

ATTIC REFLECTED CEILING PLANS

DRAWING NO.
A-104-C

PLOT DATE: 2023-08-04

© 2023 NADER GROUP ASA, NADER HOUSE OF DESIGN

1 A-200 FRONT ELEVATION
SCALE: 1/4"=1'-0"

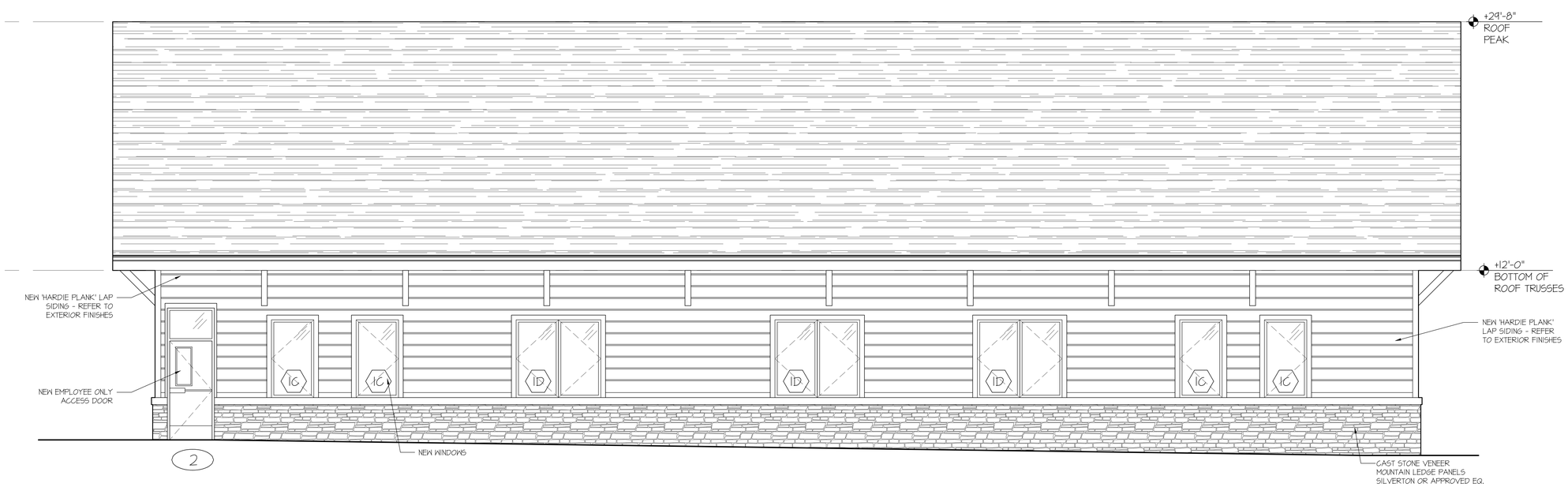


2 A-200 RIGHT SIDE ELEVATION
SCALE: 1/4"=1'-0"

# BYRAM MUNICIPAL BUILDING ADMINISTRATIVE/CIVIL

LOCATED AT 10 MANSFIELD DRIVE
BLOCK 365 - LOT 16.01
BOROUGH OF BYRAM
SUSSEX COUNTY, NEW JERSEY

NADER house + design
THE NADER GROUP, LLC
Architects, Engineers & Surveyors
111 Mill Street
Hackettstown, NJ 07840
p. 908.850.3500 | f. 908.441.5803
e. wassim.nader@thenadergroup.com
www.naderhouseofdesign.com
CERTIFICATE OF AUTHORIZATION
Engineering & Survey
No. 24GA28213500
Architecture
No. 21AC00126800

CONSTRUCTION DOCUMENTS

| NO. | DATE | REVISION | CHK |
|---|---|---|---|
| 04 | 08/01/23 | BID SET | CHK |
| 03 | 05/01/23 | CLIENT REVISIONS | CHK |
| 02 | 07/28/22 | COORDINATION REVISIONS | CHK |
| 01 | 06/28/22 | TOWN COMMENTS | CHK |
| 00 | 05/06/22 | TOWN SUBMISSION | CHK |

DRAWN BY: CC, ES
SCALE: AS SHOWN
DATE: OCTOBER 5TH, 2020
JOB NO. 18TNG029C

FRONT & RIGHT SIDE ELEVATIONS

DRAWING NO.
A-200-C

PLOT DATE: 2023-08-04

© 2023 NADER GROUP-ASA, NADER HOUSE OF DESIGN

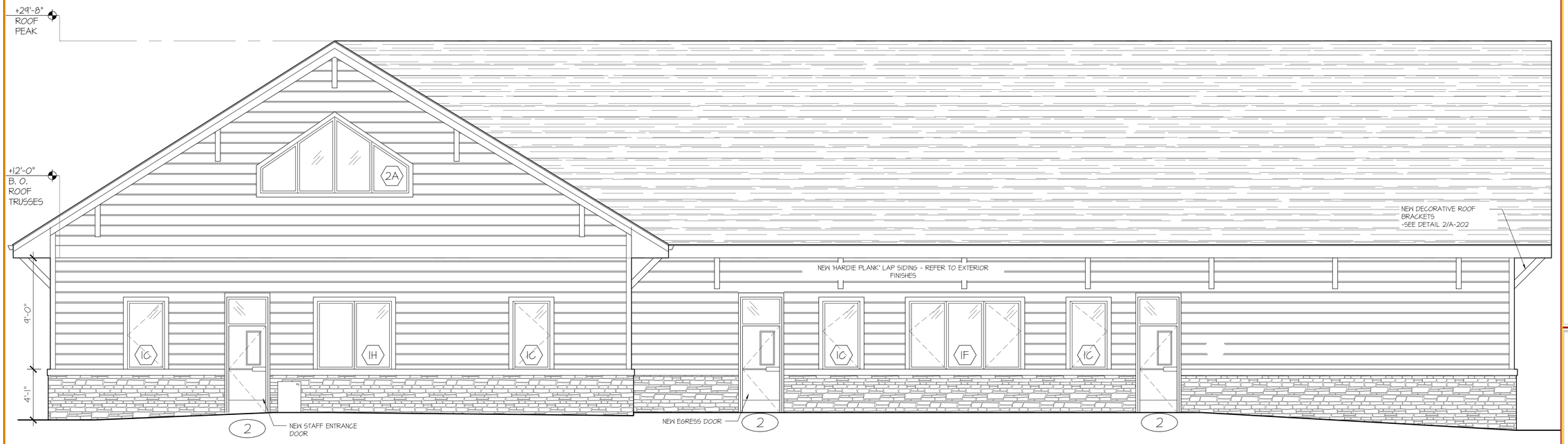


1 A-201 REAR ELEVATION
SCALE: 1/4"=1'-0"

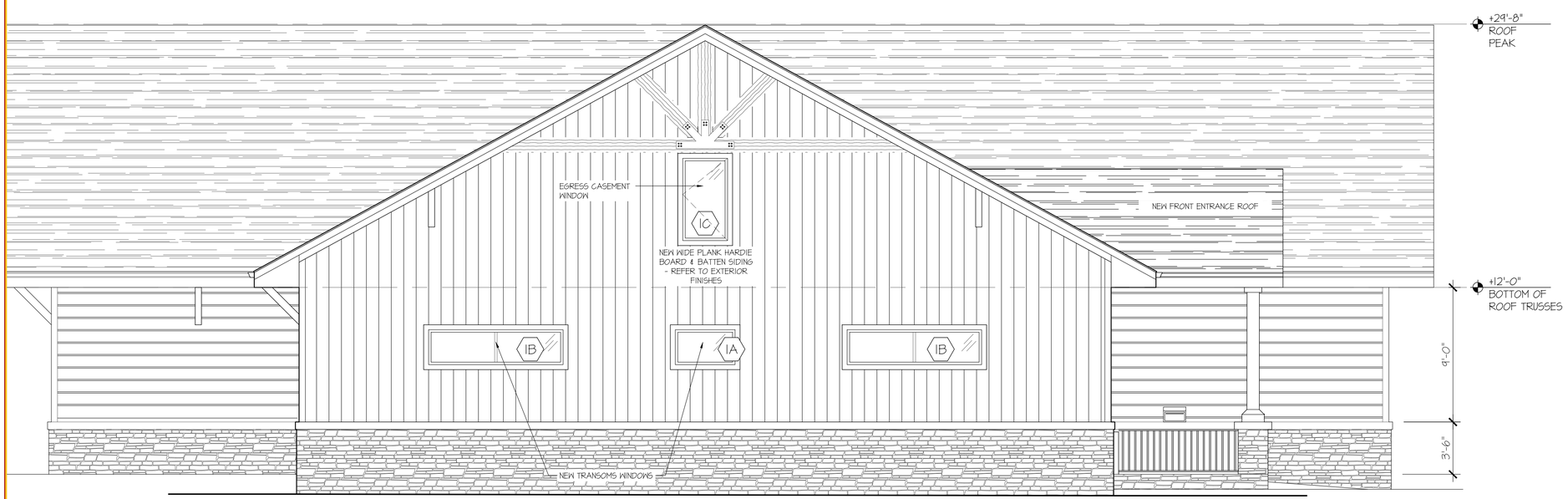


2 A-201 LEFT SIDE ELEVATION
SCALE: 1/4"=1'-0"

# BYRAM MUNICIPAL BUILDING ADMINISTRATIVE/CIVIL

LOCATED AT 10 MANSFIELD DRIVE
BLOCK 365 - LOT 16.01
BOROUGH OF BYRAM
SUSSEX COUNTY, NEW JERSEY


NADER house + design

THE NADER GROUP, LLC
Architects, Engineers & Surveyors

111 Mill Street
Hackettstown, NJ 07840

p. 908.850.3500 | f. 908.441.5803
e. wassim.nader@thenadergroup.com

www.naderhouseofdesign.com

CERTIFICATE OF AUTHORIZATION
Engineering & Survey
No. 24GA28213500
Architecture
No. 21AC00126800


CONSTRUCTION DOCUMENTS

| NO. | DATE | REVISION | CHK |
|---|---|---|---|
| 04 | 08/01/23 | BID SET | CHK |
| 03 | 05/01/23 | CLIENT REVISIONS | CHK |
| 02 | 07/28/22 | COORDINATION REVISIONS | CHK |
| 01 | 06/28/22 | TOWN COMMENTS | CHK |
| 00 | 05/06/22 | TOWN SUBMISSION | CHK |

DRAWN BY: CC, ES
SCALE: AS SHOWN
DATE: OCTOBER 5TH, 2020
JOB NO. 18TNG029C

REAR & LEFT SIDE ELEVATIONS

DRAWING NO.
A-201-C

PLOT DATE: 2023-08-04

© 2023 NADER GROUP-ASA, NADER HOUSE OF DESIGN

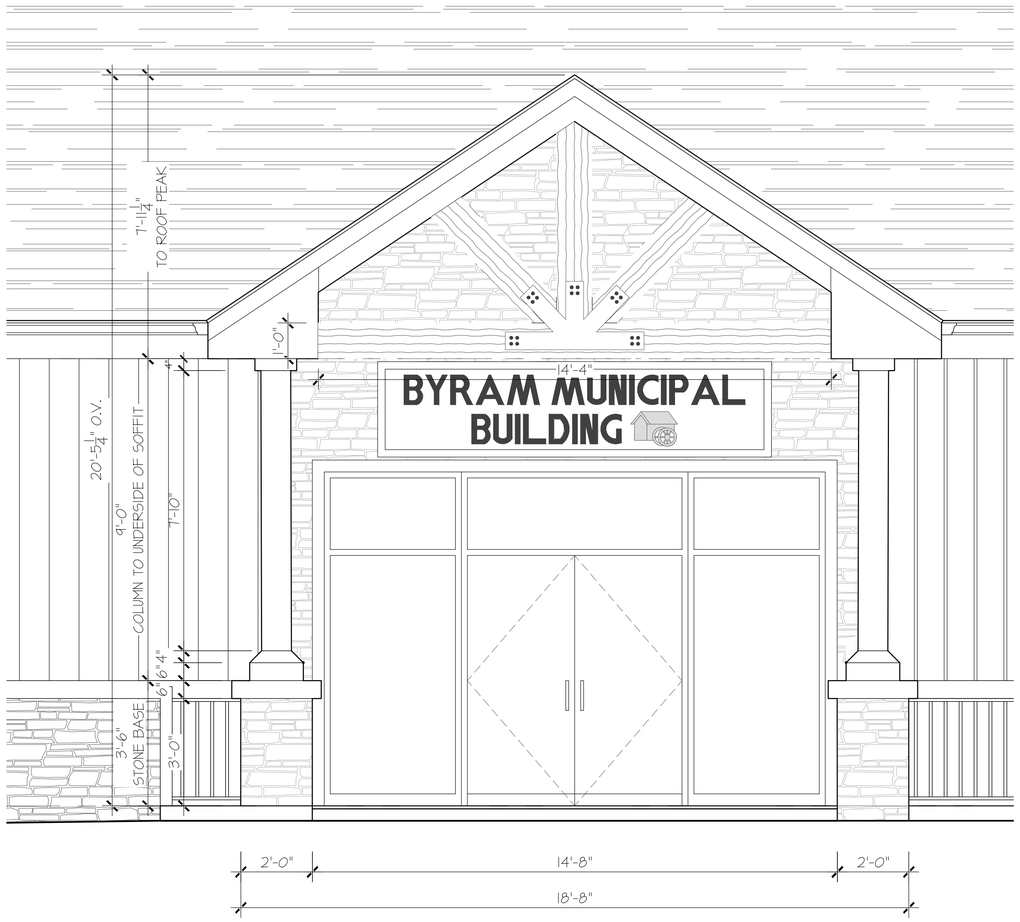


1 A-202 ENLARGED FRONT ENTRANCE ELEVATIONS
SCALE: 1/2"=1'-0"

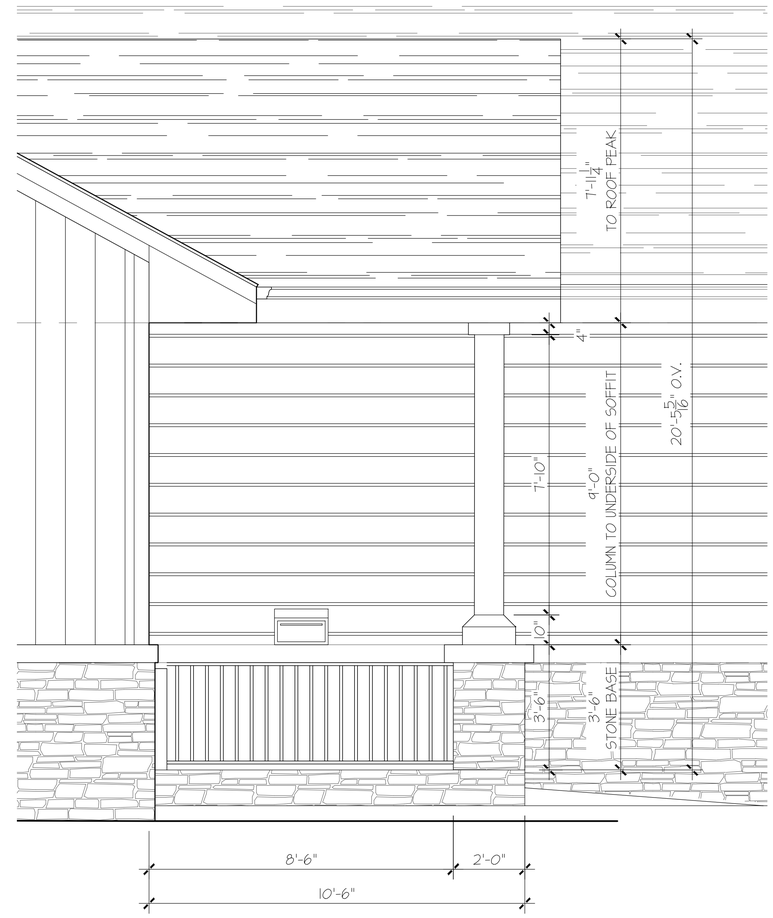


2 A-202 ENLARGED FRONT ENTRANCE ELEVATIONS
SCALE: 1/2"=1'-0"

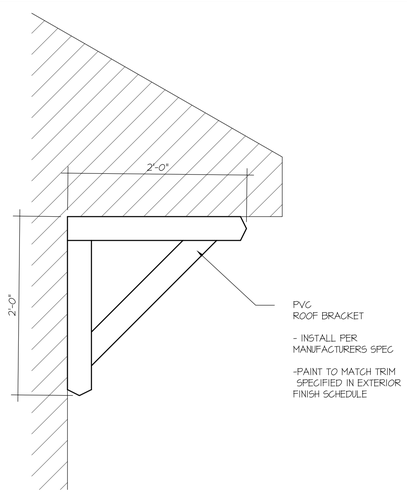


3 A-202 ENLARGED ROOF BRACKET DETAIL
SCALE: 1"=1'-0"

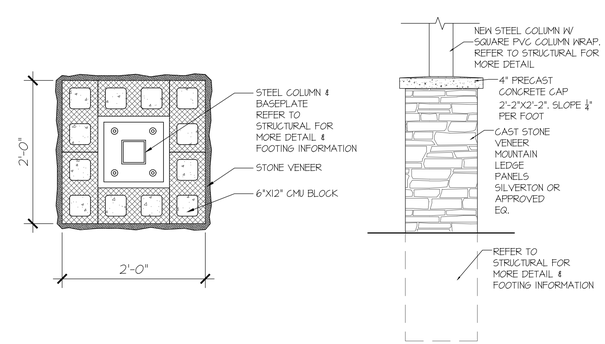


4 A-202 COLUMN BASE DETAIL
SCALE: N.T.S

# BYRAM MUNICIPAL BUILDING ADMINISTRATIVE/CIVIL

LOCATED AT 10 MANSFIELD DRIVE
BLOCK 365 - LOT 16.01
BOROUGH OF BYRAM
SUSSEX COUNTY, NEW JERSEY

NADER house+design
THE NADER GROUP, LLC
Architects, Engineers & Surveyors
111 Mill Street
Hackettstown, NJ 07840
p. 908.850.3500 | f. 908.441.5803
e. wassim.nader@thenadergroup.com
www.naderhouseofdesign.com
CERTIFICATE OF AUTHORIZATION
Engineering & Survey
No. 24GA28213500
Architecture
No. 21AC00126800

CONSTRUCTION DOCUMENTS

| NO. | DATE | REVISION | CHK |
|---|---|---|---|
| 04 | 08/01/23 | BID SET | CHK |
| 03 | 05/01/23 | CLIENT REVISIONS | CHK |
| 02 | 07/28/22 | COORDINATION REVISIONS | CHK |
| 01 | 06/28/22 | TOWN COMMENTS | CHK |
| 00 | 05/06/22 | TOWN SUBMISSION | CHK |

DRAWN BY: CC, ES
SCALE: AS SHOWN
DATE: OCTOBER 5TH, 2020
JOB NO. 18TNG029C

ENLARGED ENTRANCE ELEVATION AND ELEVATION DETAILS

DRAWING NO.
A-202-C

PLOT DATE: 2023-08-04

© 2023 NADER GROUP ASA, NADER HOUSE OF DESIGN

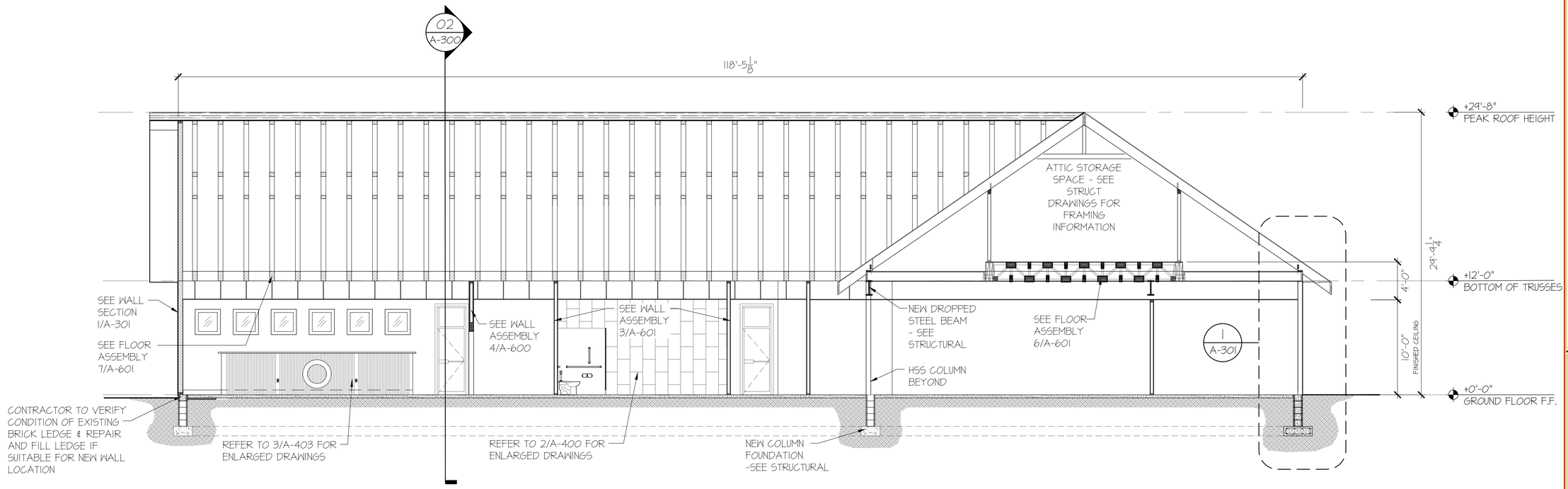


1 A-300 LONGITUDINAL BUILDING SECTION
SCALE: 3/16"=1'-0"

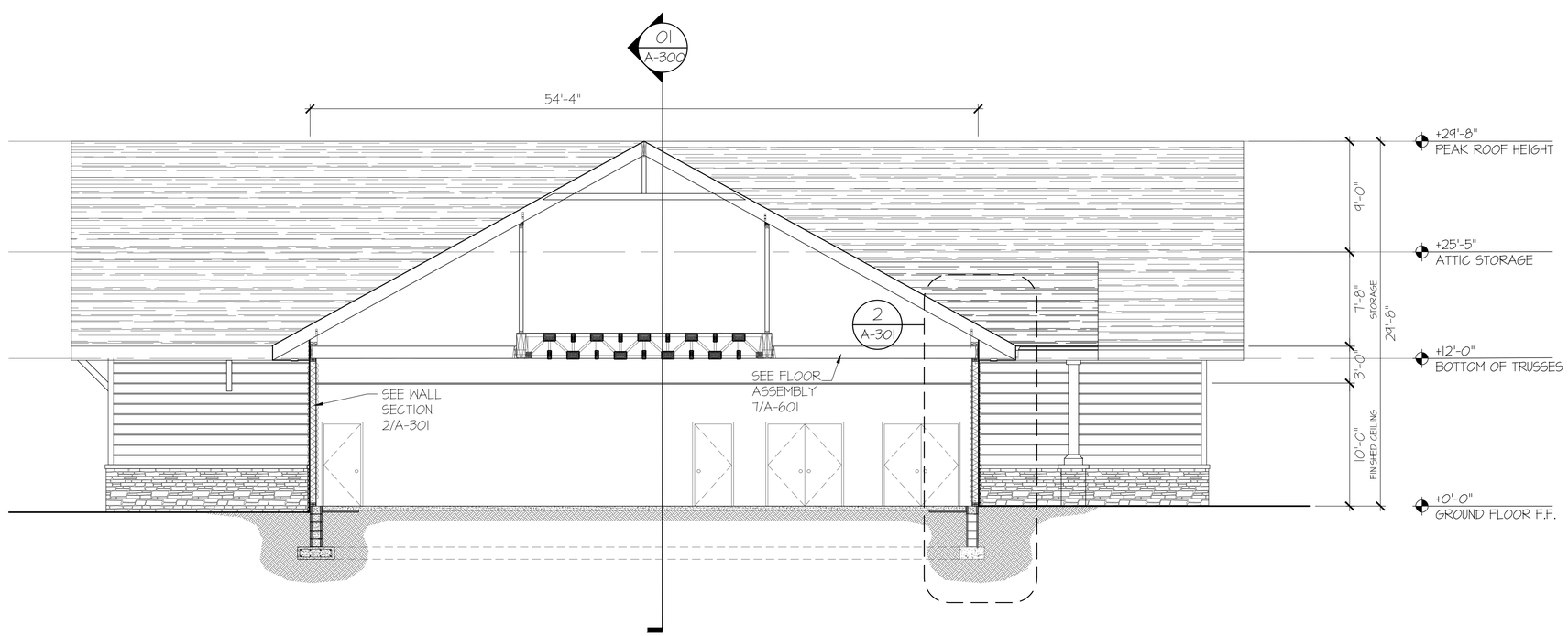


2 A-300 TRANSVERSE SECTION
SCALE: 3/16"=1'-0"

# BYRAM MUNICIPAL BUILDING ADMINISTRATIVE/CIVIL

LOCATED AT 10 MANSFIELD DRIVE
BLOCK 365 - LOT 16.01
BOROUGH OF BYRAM
SUSSEX COUNTY, NEW JERSEY

NADER house + design
THE NADER GROUP, LLC
Architects, Engineers & Surveyors
111 Mill Street
Hackettstown, NJ 07840
p. 908.850.3500 | f. 908.441.5803
e. wassim.nader@thenadergroup.com
www.naderhouseofdesign.com
CERTIFICATE OF AUTHORIZATION
Engineering & Survey
No. 24GA28213500
Architecture
No. 21AC00126800

CONSTRUCTION DOCUMENTS

| NO. | DATE | REVISION | CHK |
|---|---|---|---|
| 04 | 08/01/23 | BID SET | CHK |
| 03 | 05/01/23 | CLIENT REVISIONS | CHK |
| 02 | 07/28/22 | COORDINATION REVISIONS | CHK |
| 01 | 06/28/22 | TOWN COMMENTS | CHK |
| 00 | 05/06/22 | TOWN SUBMISSION | CHK |

DRAWN BY: CC, ES
SCALE: AS SHOWN
DATE: OCTOBER 5TH, 2020
JOB NO. 18TNG029C

LONGITUDINAL & TRANSVERSE SECTIONS

DRAWING NO.
A-300-C

PLOT DATE: 2023-08-04

© 2023 NADER GROUP-ASA, NADER HOUSE OF DESIGN

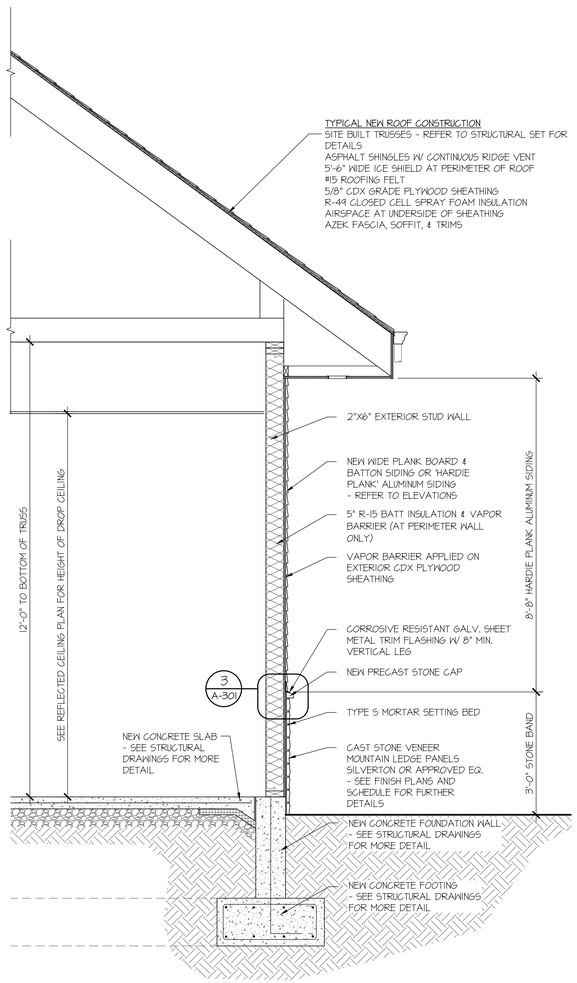


1 A-301 WALL SECTION 1
SCALE: 1/2"=1'-0"

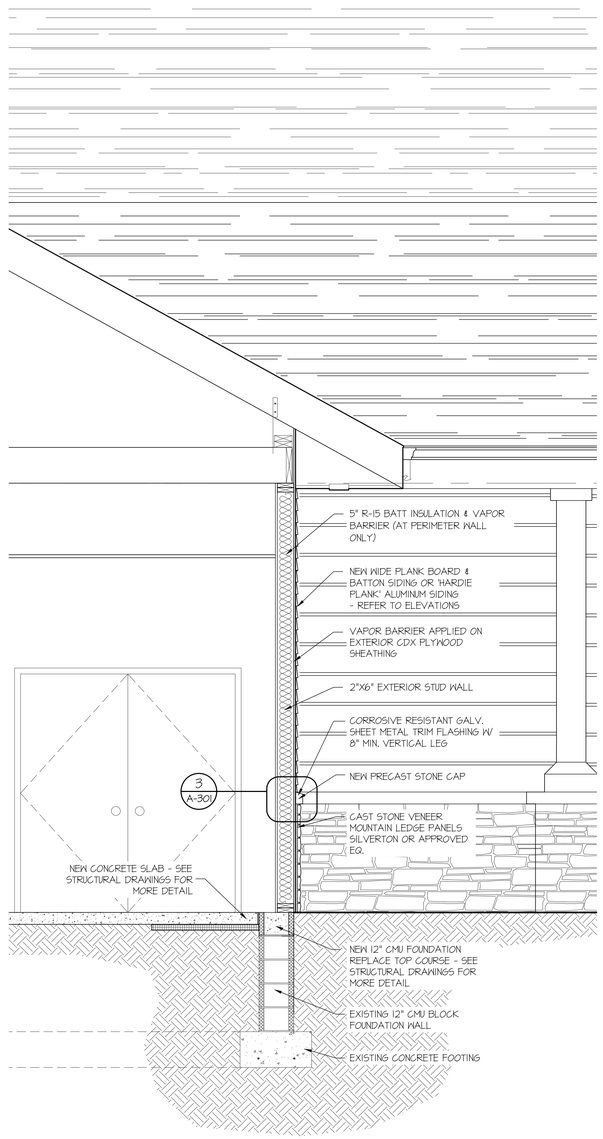


2 A-301 WALL SECTION 2
SCALE: 1/2"=1'-0"

## BUILDING ENVELOPE REQUIREMENTS FOR CLIMATE ZONE 5A

| REQUIRED - NONRESIDENTIAL ASHRAE 90.1-2019 - TABLE 5.5-5 | | | | PROVIDED |
|---|---|---|---|---|
| OPAQUE ELEMENTS | ASSEMBLY MAX U-VALUE | INSULATION MIN. R-VALUE | | |
| ROOFS | | | | |
| INSULATION ENTIRELY ABOVE DECK | U-0.032 | R-30 C.I. | | |
| METAL BUILDING | U-0.037 | R-19 + R-11 Ls OR R-25 + R-8 Ls | | |
| ATTIC AND OTHER | U-0.021 | R-49 | | |
| WALLS ABOVE GRADE | | | | |
| MASS | U-0.090 | R-11.4 C.I. | | |
| METAL BUILDING | U-0.050 | R-0 + R-19 C.I. | | |
| STEEL FRAMED | U-0.055 | R-13 + R-10 C.I. | | |
| WOOD FRAMED AND OTHER | U-0.051 | R-13 + R-7.5 C.I. OR R-19 + R-5 C.I. | | |
| WALLS BELOW GRADE | | | | |
| BELOW GRADE WALLS | C-0.119 | R-7.5 C.I. | | |
| FLOORS | | | | |
| MASS | U-0.057 | R-14.6 C.I. | | |
| STEEL JOIST | U-0.038 | R-30 | | |
| WOOD FRAMED AND OTHERS (NEW) | U-0.033 | R-30 | | |
| SLAB-ON-GRADE FLOORS | | | | |
| UNHEATED | F-0.520 | R-15 FOR 24 IN. | | |
| HEATED | F-0.688 | R-20 FOR 24 IN. | | |
| OPAQUE DOORS | | | | |
| SWINGING | U-0.37 | - | | |
| NONSWINGING | U-0.31 | - | | |
| FENESTRATION | ASSEMBLY MAX U-VALUE | ASSEMBLY MAX SHGC | ASSEMBLY MIN. VT/SHGC | |
| VERTICAL FENESTRATION, 0% - 40% OF WALL | | | | |
| NONMETAL FRAMING, ALL | U-0.32 | U-0.40 | 1.10 | |
| METAL FRAMING, FIXED | U-0.36 | U-0.38 | 1.10 | |
| METAL FRAMING, OPERABLE | U-0.45 | U-0.33 | 1.10 | |
| METAL FRAMING, ENTRANCE DOOR | U-0.63 | U-0.33 | 1.10 | |
| SKYLIGHTS, 0% - 3% OF ROOF | | | | |
| ALL TYPES | U-0.50 | U-0.40 | NR | |

* AS PER N.J.U.C.C. 5:23-6.7(e)14.i

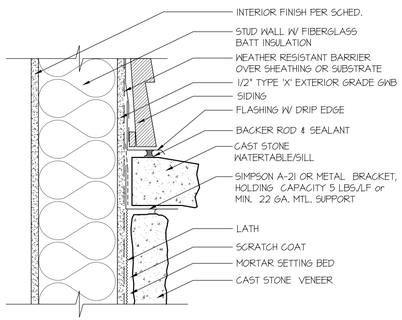


3 A-301 CULTURED STONE TO SIDING TRANSITION DETAIL
SCALE: 1-1/2"=1'-0"

# BYRAM MUNICIPAL BUILDING ADMINISTRATIVE/CIVIL

LOCATED AT 10 MANSFIELD DRIVE
BLOCK 365 - LOT 16.01
BOROUGH OF BYRAM
SUSSEX COUNTY, NEW JERSEY


NADER house + design
THE NADER GROUP, LLC
Architects, Engineers & Surveyors
111 Mill Street
Hackettstown, NJ 07840
p. 908.850.3500 | f. 908.441.5803
e. wassim.nader@thenadergroup.com
www.naderhouseofdesign.com


CERTIFICATE OF AUTHORIZATION
Engineering & Survey
No. 24GA28213500
Architecture
No. 21AC00126800

CONSTRUCTION DOCUMENTS

| NO. | DATE | REVISION | CHK |
|---|---|---|---|
| 04 | 08/01/23 | BID SET | CHK |
| 03 | 05/01/23 | CLIENT REVISIONS | CHK |
| 02 | 07/28/22 | COORDINATION REVISIONS | CHK |
| 01 | 06/28/22 | TOWN COMMENTS | CHK |
| 00 | 05/06/22 | TOWN SUBMISSION | CHK |

DRAWN BY: CC, ES
SCALE: AS SHOWN
DATE: OCTOBER 5TH, 2020
JOB NO. 18TNG029C

EXTERIOR WALL SECTIONS

DRAWING NO.
A-301-C

PLOT DATE: 2023-08-04

© 2023 NADER GROUP ASA, NADER HOUSE OF DESIGN

## PLUMBING FIX.& ACCS. SCHEDULE

| | |
|---|---|
| 1 | 1-1/2" DIA. STAINLESS STEEL, NON-SLIP TEXTURE, GRAB BAR, MOUNTED WITH CONCEALED FLANGES & ANCHORAGES. 36" LONG ON REAR WALL, 42" LONG ON SIDE WALL, 18" LONG VERTICAL. |
| 2 | TOILET TISSUE DISPENSER (TWO-ROLLS). BOBRICK CLASSIC SERIES SURFACE-MOUNTED MODEL B-2740, OR APPROVED EQUAL. |
| 3 | VERTICAL TANK STAINLESS STEEL SURFACE-MOUNTED AUTOMATIC SOAP DISPENSER. BOBRICK MODEL B-2012, OR APPROVED EQUAL. |
| 4 | AUTOMATIC PAPER TOWEL DISPENSER. BOBRICK CLASSIC SERIES SURFACE-MOUNTED MODEL B-2974, OR APPROVED EQUAL. |
| 5 | 18"x30" STAINLESS STEEL WELDED-FRAME MIRROR. BOBRICK MODEL B-290 1830, OR APPROVED EQUAL. |
| 6 | TRU BRO LAV GUARD 2. |
| 6A | TRUEBRO 'LAV SHIELD' UNDERSINK ENCLOSURE, RIGID HIGH-IMPACT PVC, ADA -COMPLIANT. |
| 7 | AMERICAN STANDARD 'LYNBROOK' TOP SPUD, BLOWOUT URINAL, 1.0 GPF, MODEL #6601012.020, OR APPROVED EQUAL |
| 7A | AMERICAN STANDARD SELECTRONIC URINAL FLUSH VALVE, BATTERY POWERED, SENSOR OPERATED, 1.0 GPF, MODEL #6063101.002, OR APPROVED EQUAL. |
| 8 | AMERICAN STANDARD BARRIER FREE 'MADERA' FLOWISE 16-1/2" HEIGHT, 1.28 GPF, ELONGATED FLUSHOMETER TOILET MODEL #3461.128, OR APPROVED EQUAL. |
| 8A | AMERICAN STANDARD SELECTRONIC FLOWISE TOILET FLUSH VALVE, BATTERY POWERED, SENSOR OPERATED, 1.28 GPF, MODEL #6065.121.002, OR APPROVED EQUAL. |
| 9 | AMERICAN STANDARD BARRIER FREE LUCERNE WALL-HUNG LAVATORY MODEL #0356.421 (CENTER HOLE), OR APPROVED EQUAL. |
| 9A | SLOAN OPTIMA SENSOR ACTIVATED BATTERY OPERATED FAUCET #EBF-187 W/ HOT & COLD WATER SUPPLY OR APPROVED EQUAL. |
| 10 | DOORWAVE HANDS-FREE DOOR OPENER OR APPROVED EQUAL. |

## KITCHEN FIXTURES

| | |
|---|---|
| A | ELKAY 'LUSTERTONE' BARRIER-FREE 24"x18"x6½" DROP IN STAINLESS STEEL DOUBLE BOWL KITCHEN SINK, MODEL LRADG241865PD, OR APPROVED EQUAL. |
| A-1 | ELKAY 8" CENTERSET WITH 8" GOOSNECK SPOUT, TWO HANDLE, 1.5 GPM ADA COMPLIANT KITCHEN FAUCET , MODEL #LK8000NO8T6 OR APPROVED EQUAL. |
| B | EEMAX TANKLESS ELECTRIC UNDER SINK HOT WATER HEATER. MODEL# SP3208 OR APPROVED EQUAL. |
| C | HALSEY TAYLOR HYDROBOOST IN-WALL BOTTLE FILLING STATION WITH MOUNTING FRAME HIGH EFFICIENCY FILTERED REFRIGERATED STAINLESS HTHB9M OR APPROVED EQUAL. |

NOTE:

MENS ROOM SHOWN. LADIES ROOM IS SIMILAR EXCEPT WITH NO PRIVACY WALL AND URINAL IS REPLACED WITH A STALL.

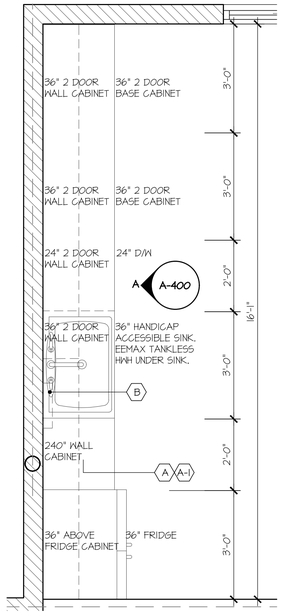


1 A-400 ENLARGED BREAK ROOM
SCALE: 1/2"=1'-0"

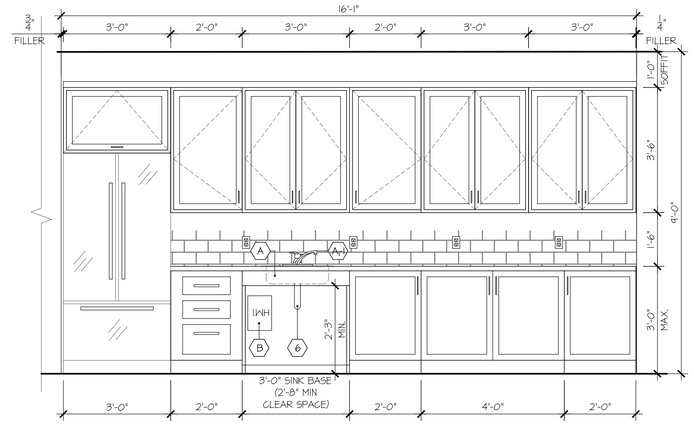


A A-400 BREAK ROOM ELEVATION
SCALE: 1/2"=1'-0"

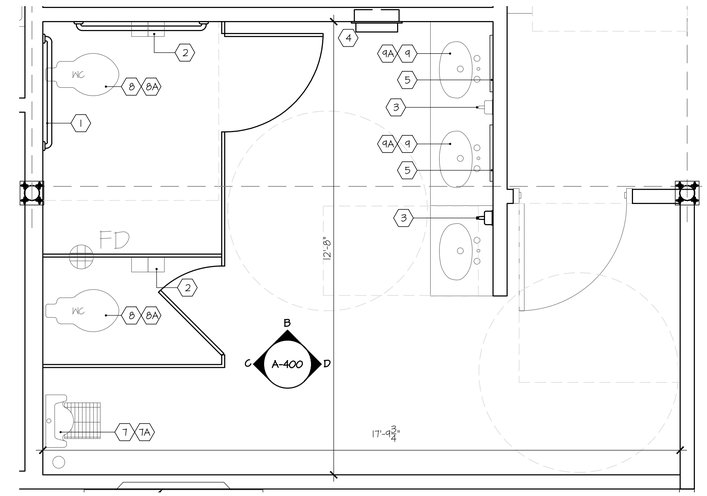


2 A-400 TYP. ENLARGED TOILET PLAN
SCALE: 1/2"=1'-0"

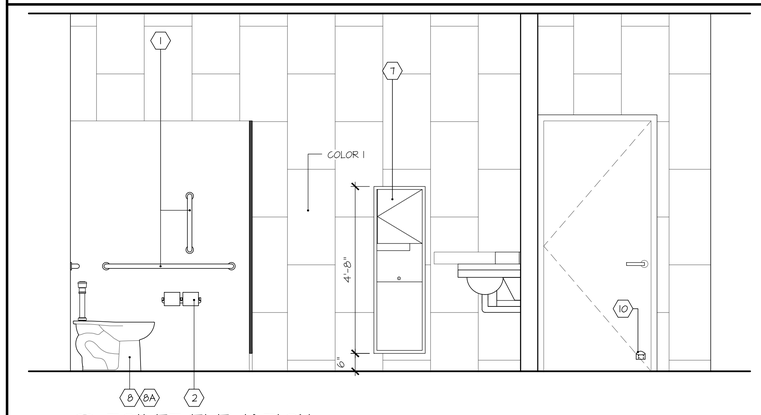


B A-400 TOILET ELEVATION
SCALE: 1/2"=1'-0"

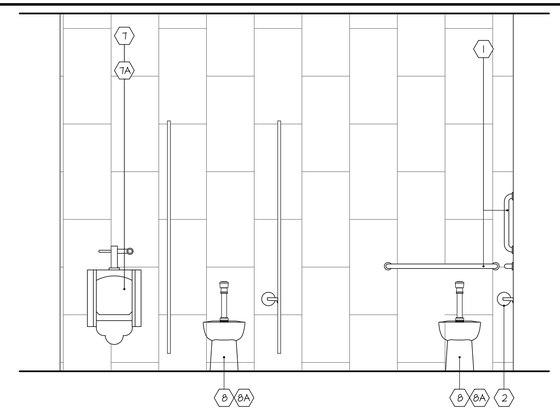

C A-400 TOILET ELEVATION
SCALE: 1/2"=1'-0"

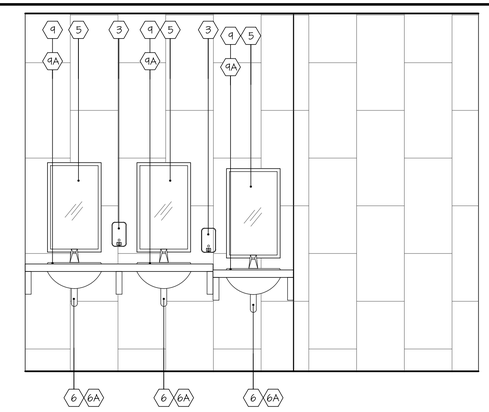

D A-400 ENLARGED TOILET ELEVATION
SCALE: 1/2"=1'-0"

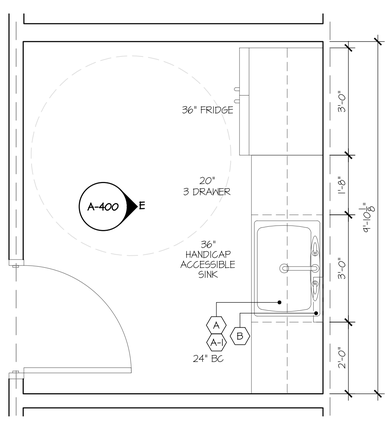


3 A-400 SERVICE PANTRY PLAN
SCALE: 1/2"=1'-0"

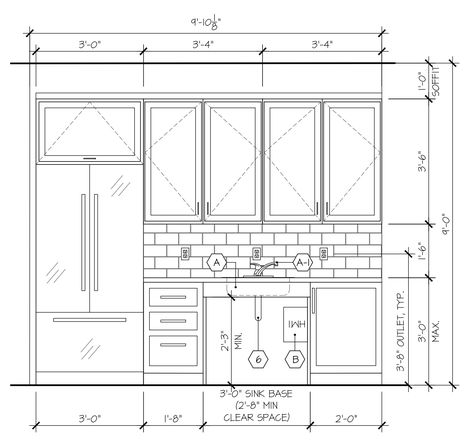


E A-400 SERVICE PANTRY ELEVATION
SCALE: 1/2"=1'-0"

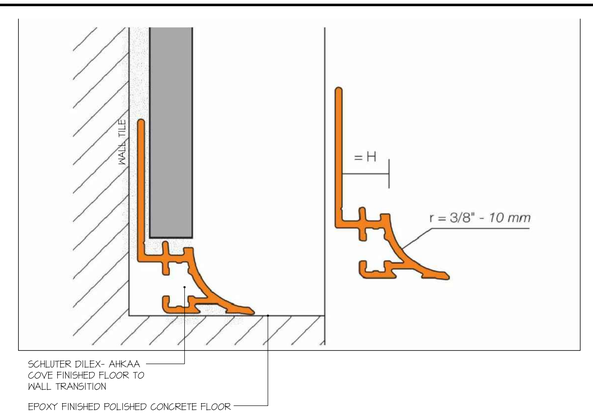


4 A-400 SCHLUTER FLOOR TO WALL CORNER TRANSITION DETAIL
SCALE: NTS

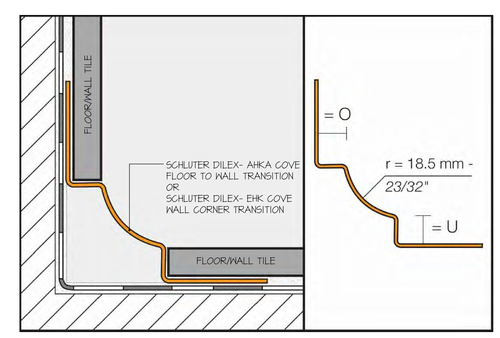


5 A-400 SCHLUTER WALL CORNER TILE TRANSITION DETAIL
SCALE: NTS

# BYRAM MUNICIPAL BUILDING ADMINISTRATIVE/CIVIL

LOCATED AT 10 MANSFIELD DRIVE
BLOCK 365 - LOT 16.01
BOROUGH OF BYRAM
SUSSEX COUNTY, NEW JERSEY


NADER house + design
THE NADER GROUP, LLC
Architects, Engineers & Surveyors
111 Mill Street
Hackettstown, NJ 07840
p. 908.850.3500 | f. 908.441.5803
e. wassim.nader@thenadergroup.com
www.naderhouseofdesign.com


CERTIFICATE OF AUTHORIZATION
Engineering & Survey
No. 24GA28213500
Architecture
No. 21AC00126800

CONSTRUCTION DOCUMENTS

| NO. | DATE | REVISION | CHK |
|---|---|---|---|
| 04 | 08/01/23 | BID SET | CHK |
| 03 | 05/01/23 | CLIENT REVISIONS | CHK |
| 02 | 07/28/22 | COORDINATION REVISIONS | CHK |
| 01 | 06/28/22 | TOWN COMMENTS | CHK |
| 00 | 05/06/22 | TOWN SUBMISSION | CHK |

DRAWN BY: CC, ES
SCALE: AS SHOWN
DATE: OCTOBER 5TH, 2020
JOB NO. 18TNG029C

ENLARGED BATH PLAN, ELEVATIONS & PLUMBING SCHEDULE

DRAWING NO.
A-400-C

PLOT DATE: 2023.08.04

© 2023 NADER GROUP-ASA, NADER HOUSE OF DESIGN

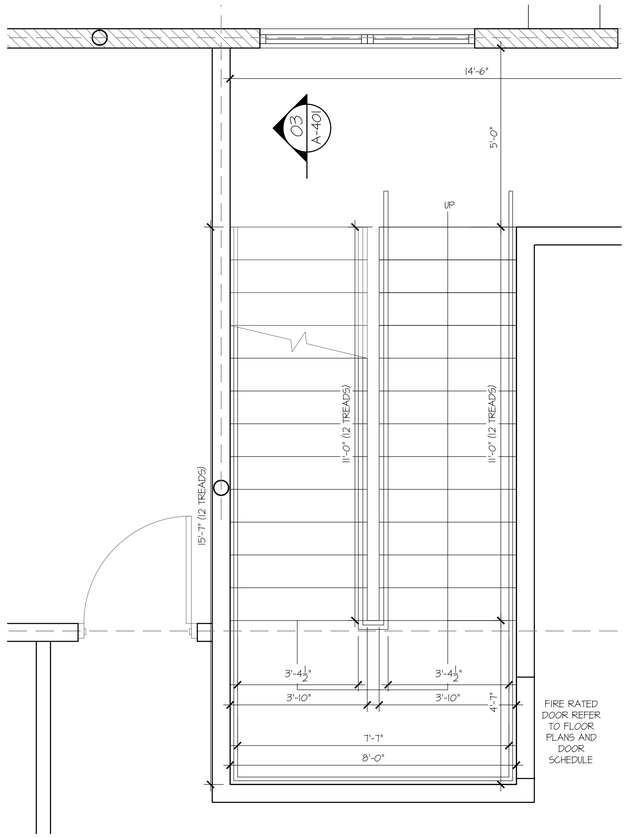


1 A-401 ENLARGED GROUND FLOOR STAIR PLAN
SCALE: 1/2"=1'-0"

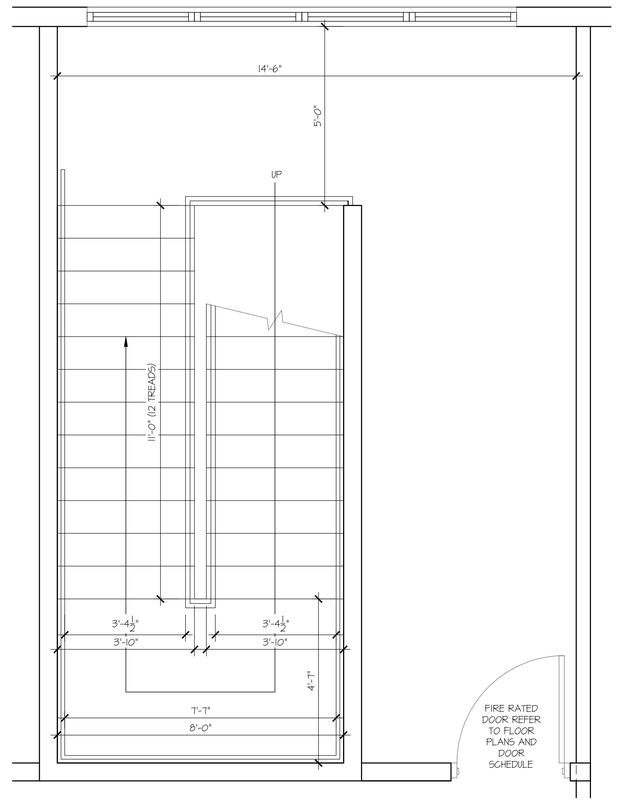


2 A-401 ENLARGED ATTIC STAIR PLAN
SCALE: 1/2"=1'-0"

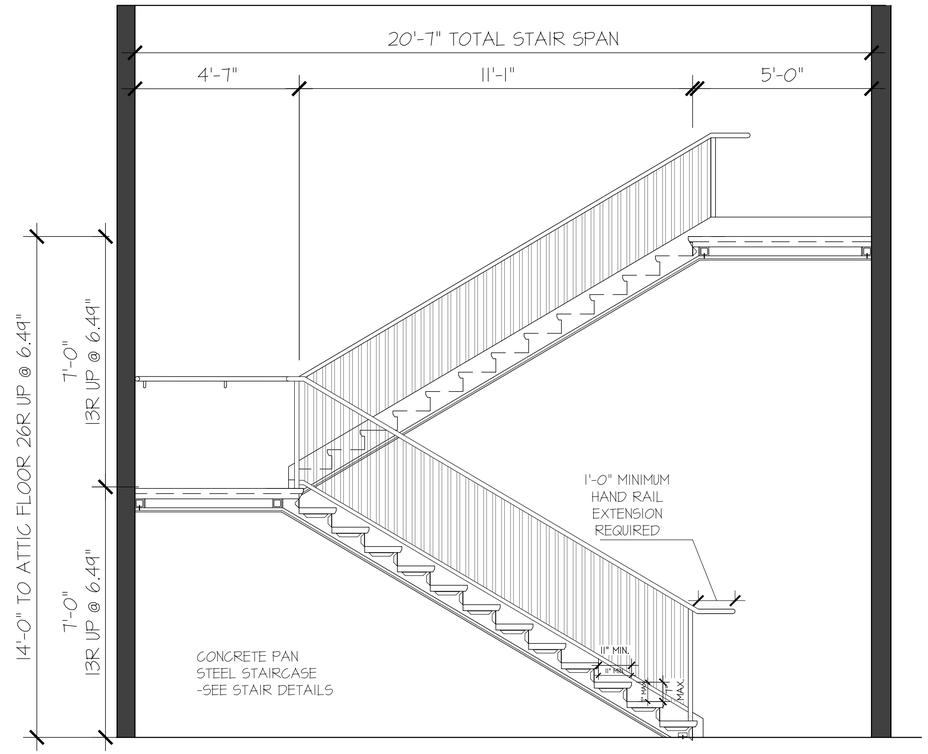


3 A-401 ENLARGED STAIR SECTION
SCALE: 1/2"=1'-0"

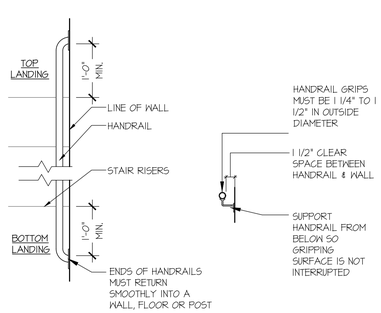


4 A-401 TYP. HANDRAIL SECTIONS
SCALE: 3"/4"=1'-0"

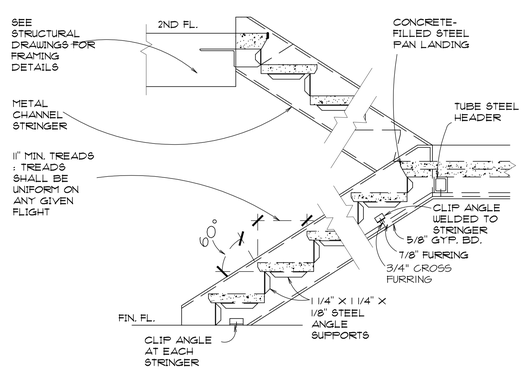


5 A-401 STAIR SECTION DETAILS
SCALE: 3/4"=1'-0"

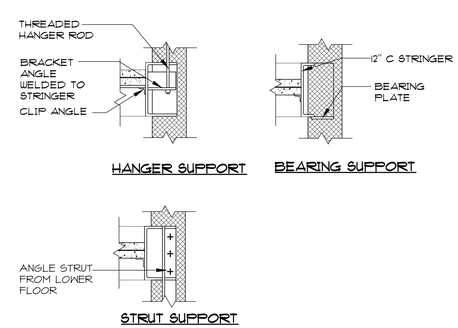


6 A-401 LANDING ANCHOR DETAILS
SCALE: 3/4"=1'-0"

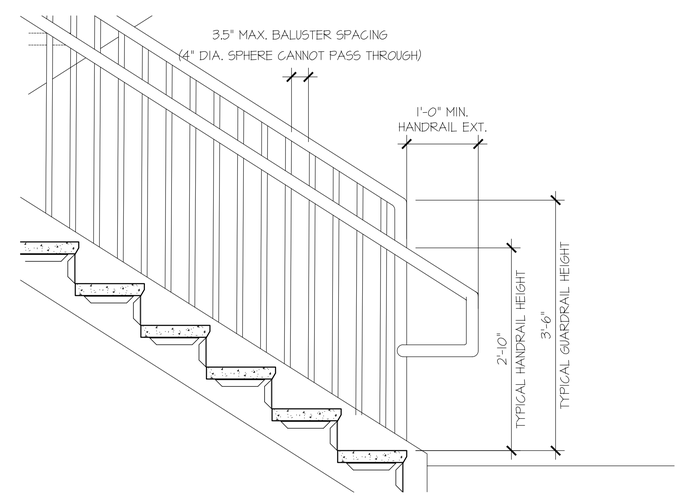


7 A-401 ENLARGED RAILING DETAIL
SCALE: 1"=1'-0"

# BYRAM MUNICIPAL BUILDING ADMINISTRATIVE/CIVIL

LOCATED AT 10 MANSFIELD DRIVE
BLOCK 365 - LOT 16.01
BOROUGH OF BYRAM
SUSSEX COUNTY, NEW JERSEY


NADER house + design
THE NADER GROUP, LLC
Architects, Engineers & Surveyors
111 Mill Street
Hackettstown, NJ 07840
p. 908.850.3500 | f. 908.441.5803
e. wassim.nader@thenadergroup.com
www.naderhouseofdesign.com
CERTIFICATE OF AUTHORIZATION
Engineering & Survey
No. 24GA28213500
Architecture
No. 21AC00126800


CONSTRUCTION DOCUMENTS

| NO. | DATE | REVISION | CHK |
|---|---|---|---|
| 04 | 08/01/23 | BID SET | CHK |
| 03 | 05/01/23 | CLIENT REVISIONS | CHK |
| 02 | 07/28/22 | COORDINATION REVISIONS | CHK |
| 01 | 06/28/22 | TOWN COMMENTS | CHK |
| 00 | 05/06/22 | TOWN SUBMISSION | CHK |

DRAWN BY: CC, ES
SCALE: AS SHOWN
DATE: OCTOBER 5TH, 2020
JOB NO. 18TNG029C

ENLARGED STAIR PLAN & SECTION, AND DETAILS

DRAWING NO.
A-401-C

PLOT DATE: 2023-08-04

© 2023 NADER GROUP ASA, NADER HOUSE OF DESIGN

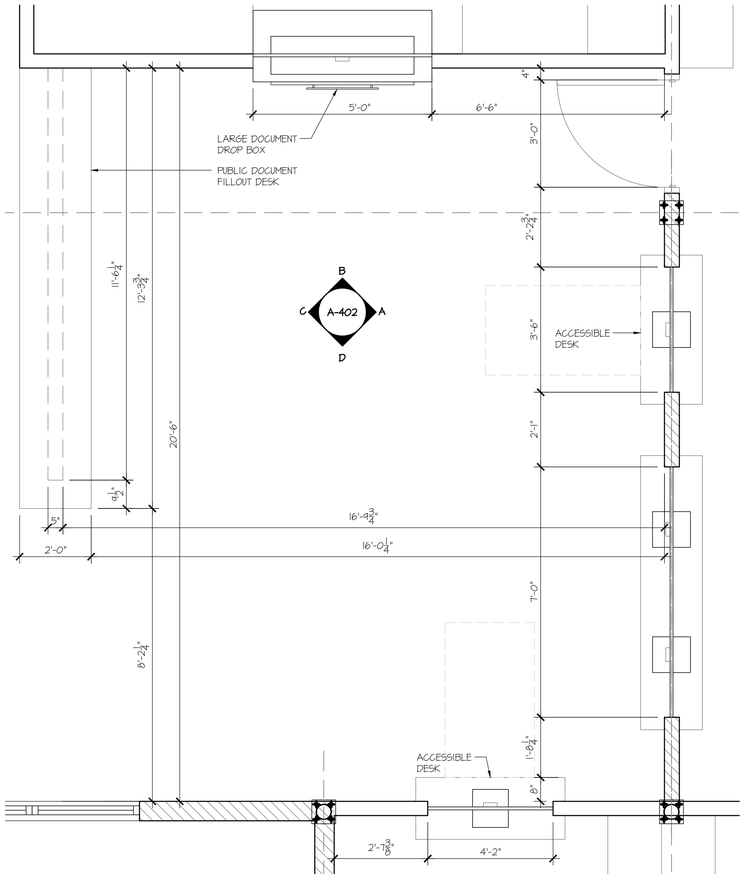


1 A-402 ENLARGED PUBLIC AREA PLAN
SCALE: 1/2"=1'-0"

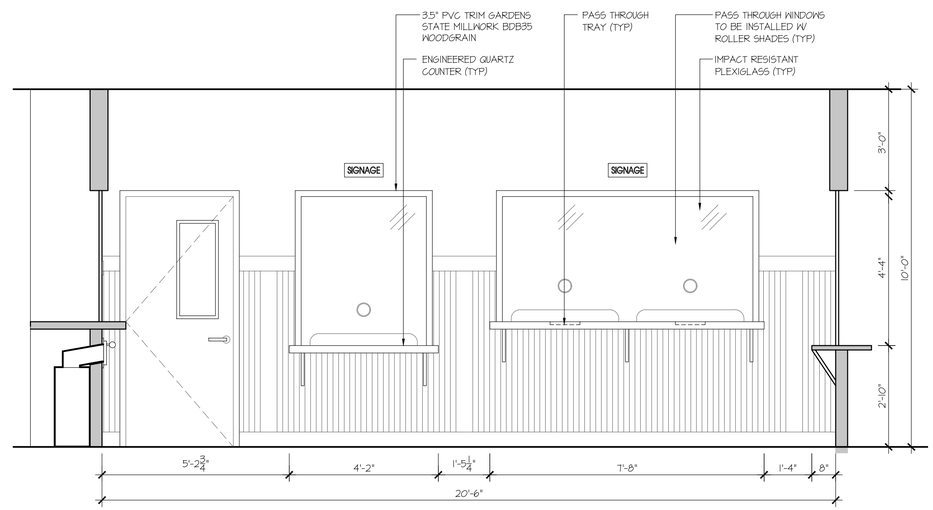


A A-402 INTERIOR ELEVATION
SCALE: 1/2"=1'-0"

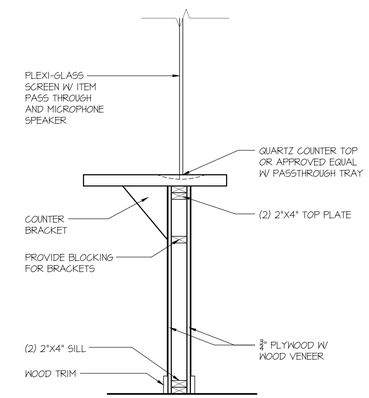


2 A-402 DESK SECTION
SCALE: 3/4"=1'-0"

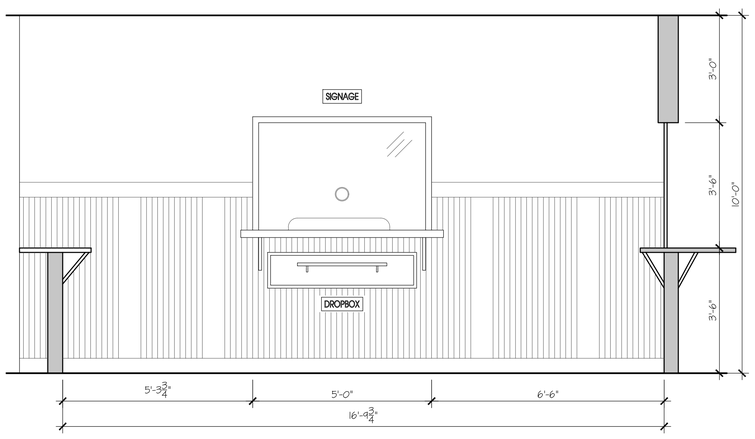


B A-402 INTERIOR ELEVATION
SCALE: 1/2"=1'-0"

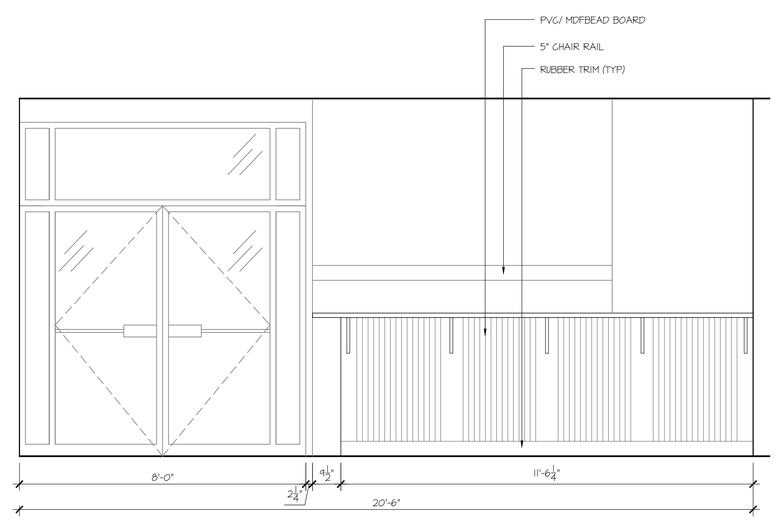


C A-402 INTERIOR ELEVATION
SCALE: 1/2"=1'-0"

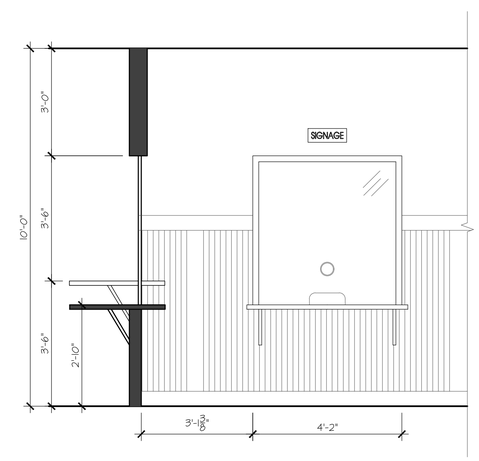


D A-402 INTERIOR ELEVATION
SCALE: 1/2"=1'-0"

# BYRAM MUNICIPAL BUILDING ADMINISTRATIVE/CIVIL

LOCATED AT 10 MANSFIELD DRIVE
BLOCK 365 - LOT 16.01
BOROUGH OF BYRAM
SUSSEX COUNTY, NEW JERSEY


NADER house + design
THE NADER GROUP, LLC
Architects, Engineers & Surveyors
111 Mill Street
Hackettstown, NJ 07840
p. 908.850.3500 | f. 908.441.5803
e. wassim.nader@thenadergroup.com
www.naderhouseofdesign.com
CERTIFICATE OF AUTHORIZATION
Engineering & Survey
No. 24GA28213500
Architecture
No. 21AC00126800


CONSTRUCTION DOCUMENTS

| NO. | DATE | REVISION | CHK |
|---|---|---|---|
| 04 | 08/01/23 | BID SET | CHK |
| 03 | 05/01/23 | CLIENT REVISIONS | CHK |
| 02 | 07/28/22 | COORDINATION REVISIONS | CHK |
| 01 | 06/28/22 | TOWN COMMENTS | CHK |
| 00 | 05/06/22 | TOWN SUBMISSION | CHK |

DRAWN BY: CC, ES
SCALE: AS SHOWN
DATE: OCTOBER 5TH, 2020
JOB NO. 18TNG029C

ENLARGED PUBLIC ACCESS AREA & DESK ELEVATIONS

DRAWING NO.
A-402-C

PLOT DATE: 2023-08-04

© 2023 NADER GROUP-ASA, NADER HOUSE OF DESIGN

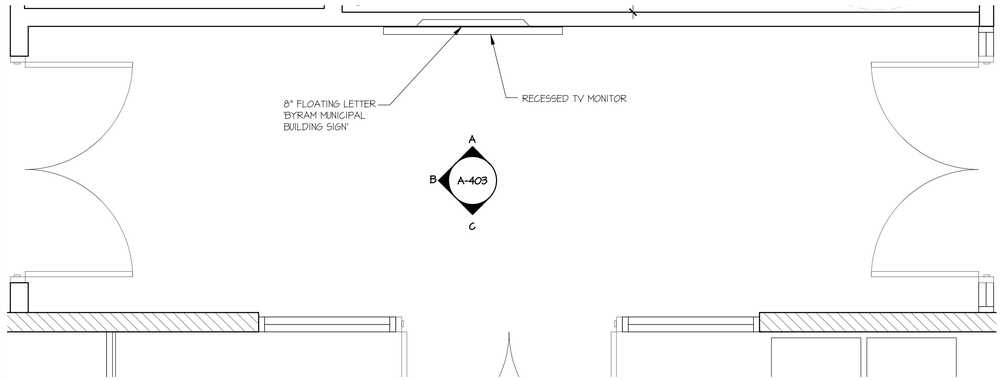


1 A-403 ENLARGED LOBBY PLAN
SCALE: 1/2"=1'-0"

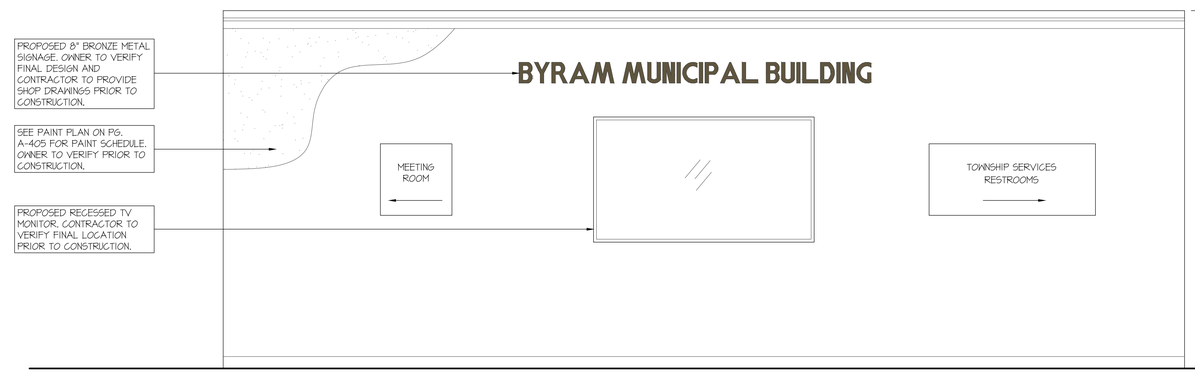


A A-403 INTERIOR ELEVATION
SCALE: 1/2"=1'-0"

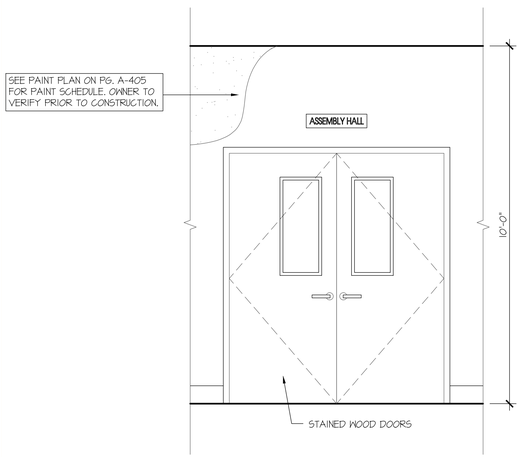


B A-403 INTERIOR ELEVATION
SCALE: 1/2"=1'-0"

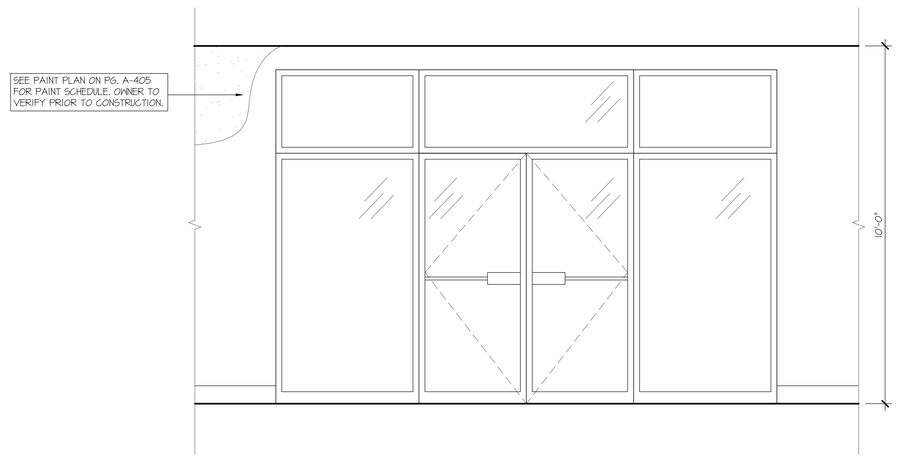


C A-403 INTERIOR ELEVATION
SCALE: 1/2"=1'-0"

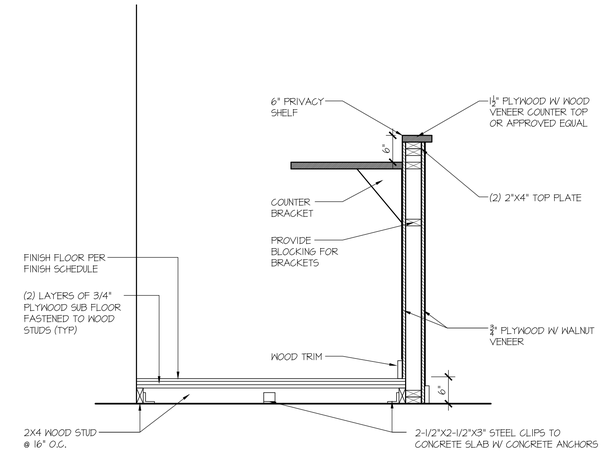


2 A-403 ASSEMBLY DESK SECTION
SCALE: 3/4"=1'-0"

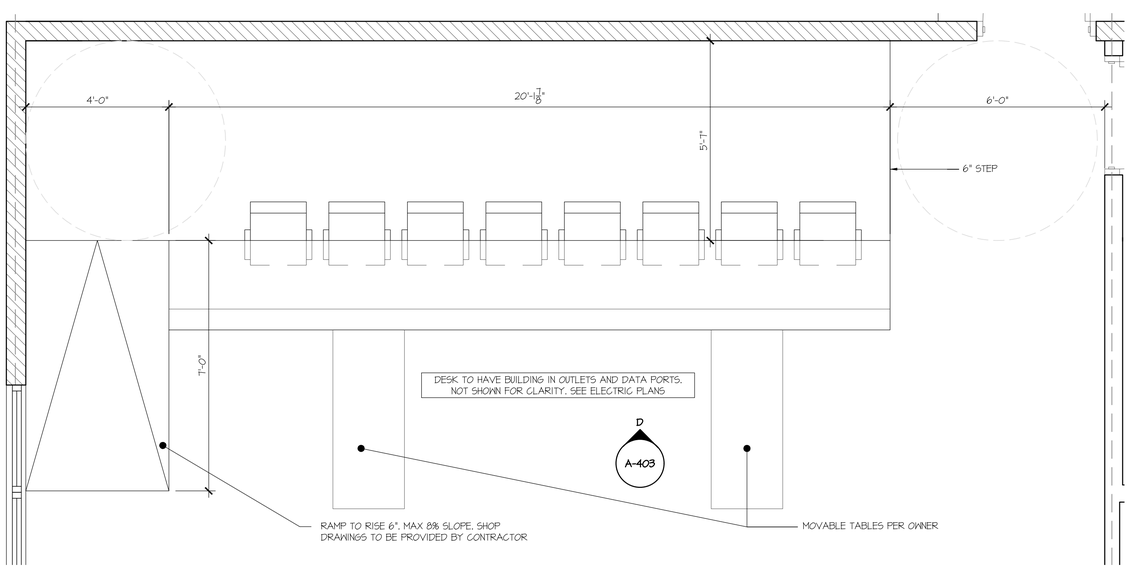


3 A-403 ENLARGED ASSEMBLY DESK PLAN
SCALE: 1/2"=1'-0"

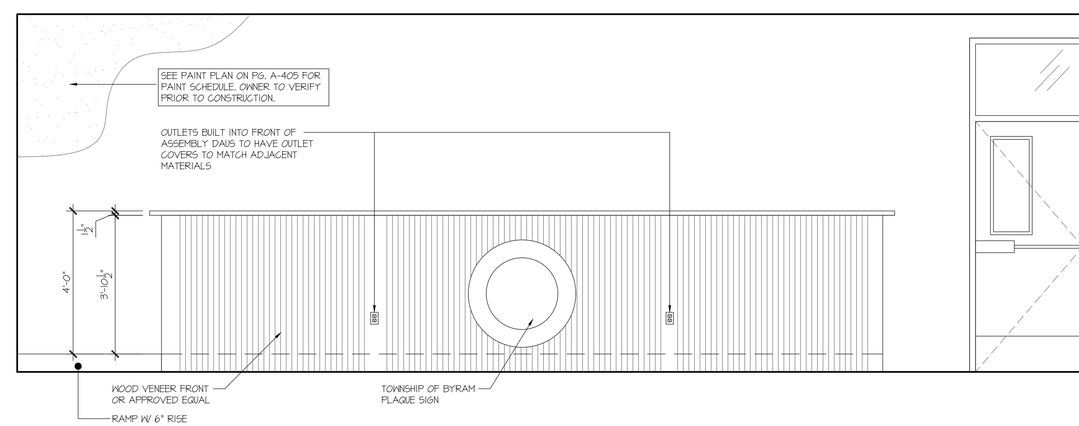


D A-403 ENLARGED ASSEMBLY DESK ELEVATION
SCALE: 1/2"=1'-0"

# BYRAM MUNICIPAL BUILDING ADMINISTRATIVE/CIVIL

LOCATED AT 10 MANSFIELD DRIVE
BLOCK 365 - LOT 16.01
BOROUGH OF BYRAM
SUSSEX COUNTY, NEW JERSEY


NADER house + design
THE NADER GROUP, LLC
Architects, Engineers & Surveyors
111 Mill Street
Hackettstown, NJ 07840
p. 908.850.3500 | f. 908.441.5803
e. wassim.nader@thenadergroup.com
www.naderhouseofdesign.com
CERTIFICATE OF AUTHORIZATION
Engineering & Survey
No. 24GA28213500
Architecture
No. 21AC00126800


CONSTRUCTION DOCUMENTS

| NO. | DATE | REVISION | CHK |
|---|---|---|---|
| 04 | 08/01/23 | BID SET | CHK |
| 03 | 05/01/23 | CLIENT REVISIONS | CHK |
| 02 | 07/28/22 | COORDINATION REVISIONS | CHK |
| 01 | 06/28/22 | TOWN COMMENTS | CHK |
| 00 | 05/06/22 | TOWN SUBMISSION | CHK |

DRAWN BY: CC, ES
SCALE: AS SHOWN
DATE: OCTOBER 5TH, 2020
JOB NO. 18TNG029C

ENLARGED ASSEMBLY DESK ELEVATIONS

DRAWING NO.
A-403-C

PLOT DATE: 2023-08-04

© 2023 NADER GROUP-ASA, NADER HOUSE OF DESIGN

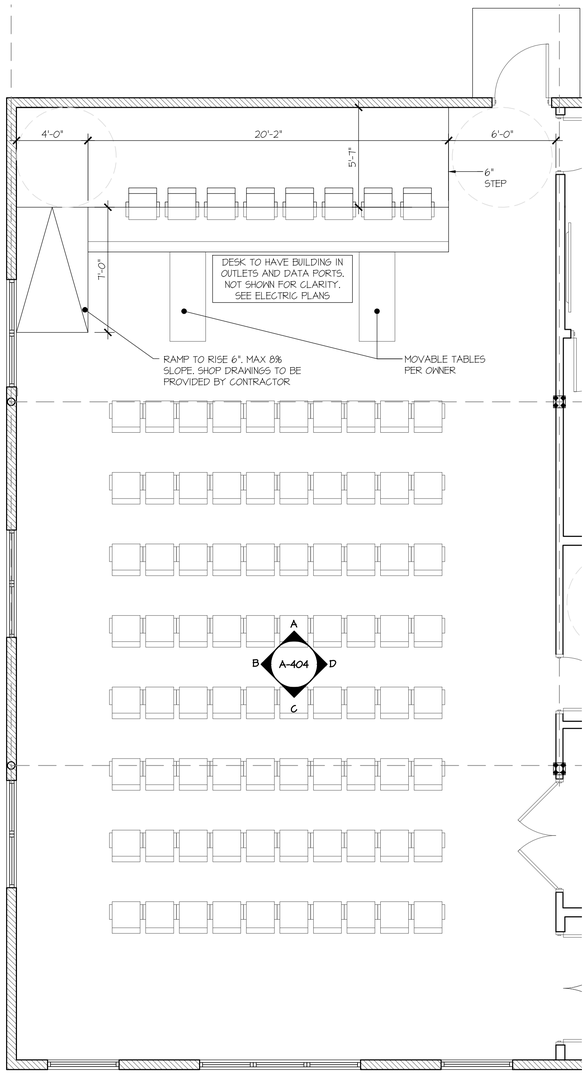


1 A-404 ENLARGED ASSEMBLY ROOM PLAN
SCALE: 1/4"=1'-0"

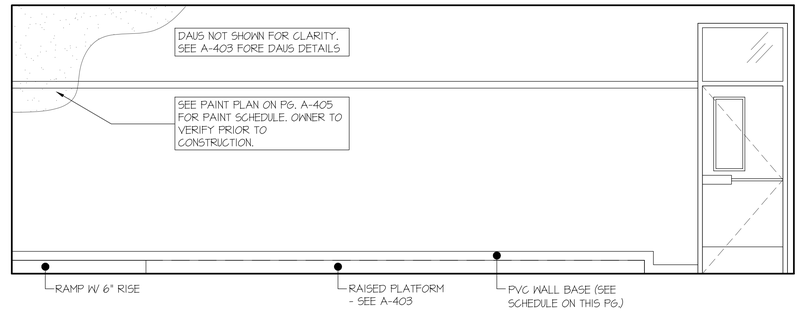


A A-404 ENLARGED ASSEMBLY ELEVATION
SCALE: 3/8"=1'-0"

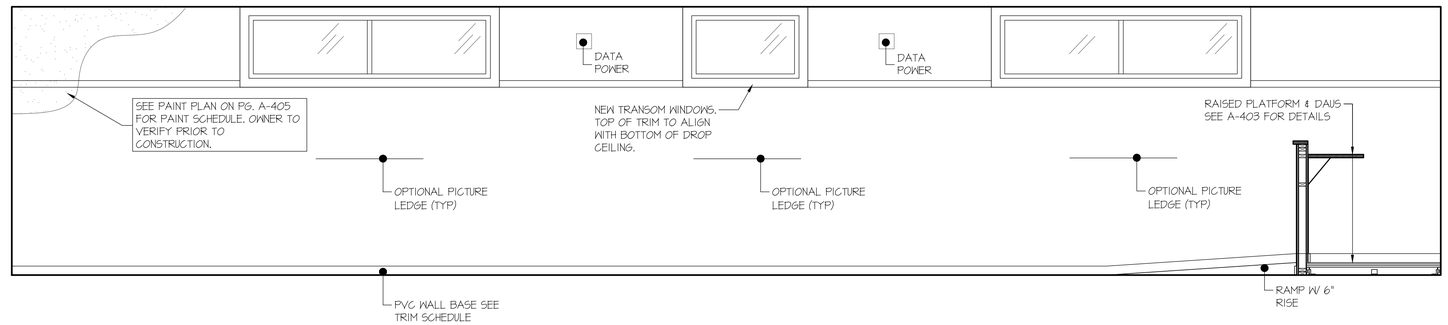


B A-404 ENLARGED ASSEMBLY ELEVATION
SCALE: 3/8"=1'-0"

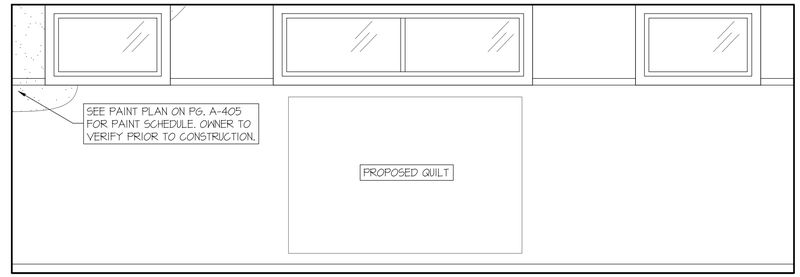


C A-404 ENLARGED ASSEMBLY ELEVATION
SCALE: 3/8"=1'-0"

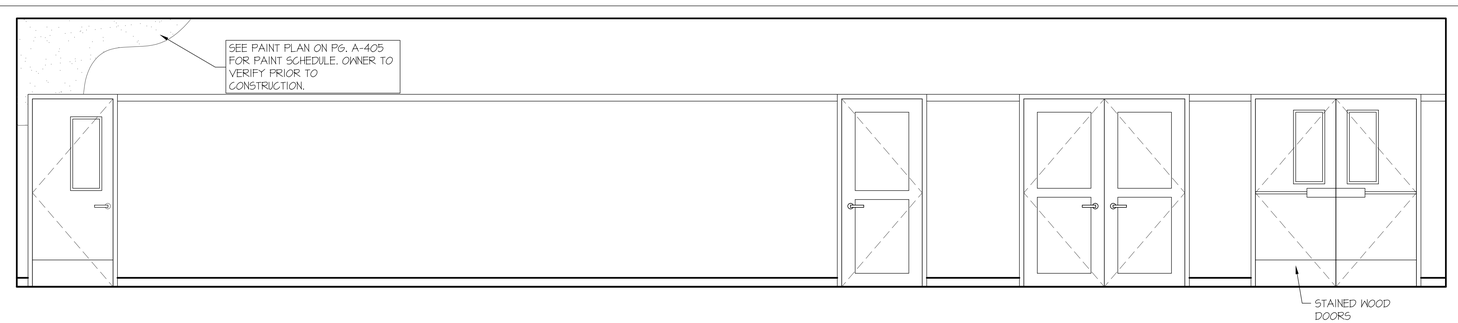


D A-404 ENLARGED ASSEMBLY ELEVATION
SCALE: 3/8"=1'-0"

TRIM SCHEDULE

| LOCATION | MANUFACTURER | MODEL # | MATERIAL | COMMENTS |
|---|---|---|---|---|
| BASE | GARDEN STATE LUMBER | BB514 | 5.25" PVC | OWNER TO VERIFY ALL FINISHES, PRIOR TO INSTALLATION, WITH CONTRACTOR. |
| TALL RAIL | GARDEN STATE LUMBER | 818T | PRIMED PINE | |
| DOOR CASING | GARDEN STATE LUMBER | BDB335 | 3.5" PVC | |
| WINDOW CASING | GARDEN STATE LUMBER | BDB335 | 3.5" PVC | |

# BYRAM MUNICIPAL BUILDING ADMINISTRATIVE/CIVIL

LOCATED AT 10 MANSFIELD DRIVE
BLOCK 365 - LOT 16.01
BOROUGH OF BYRAM
SUSSEX COUNTY, NEW JERSEY


NADER house + design
THE NADER GROUP, LLC
Architects, Engineers & Surveyors
111 Mill Street
Hackettstown, NJ 07840
p. 908.850.3500 | f. 908.441.5803
e. wassim.nader@thenadergroup.com
www.naderhouseofdesign.com
CERTIFICATE OF AUTHORIZATION
Engineering & Survey
No. 24GA28213500
Architecture
No. 21AC00126800


CONSTRUCTION DOCUMENTS

| NO. | DATE | REVISION | CHK |
|---|---|---|---|
| 04 | 08/01/23 | BID SET | CHK |
| 03 | 05/01/23 | CLIENT REVISIONS | CHK |
| 02 | 07/28/22 | COORDINATION REVISIONS | CHK |
| 01 | 06/28/22 | TOWN COMMENTS | CHK |
| 00 | 05/06/22 | TOWN SUBMISSION | CHK |

DRAWN BY: CC, ES
SCALE: AS SHOWN
DATE: OCTOBER 5TH, 2020
JOB NO. 18TNG029C

ENLARGED ASSEMBLY ROOM ELEVATIONS

DRAWING NO.
A-404-C

PLOT DATE: 2023-08-03

© 2023 NADER GROUP ASA, NADER HOUSE OF DESIGN

# PAINT SCHEDULE

| TAG # | MAKE | COLOR | FINISH | COMMENTS |
|---|---|---|---|---|
| 1A | BENJAMIN MOORE | 1622 | SATIN | OWNER TO VERIFY ALL COLORS & FINISHES, PRIOR TO PAINTING, WITH CONTRACTOR. |
| 1B | BENJAMIN MOORE | CSP-580 | SATIN | |
| 1C | BENJAMIN MOORE | AF-5 | SATIN | |
| 1D | BENJAMIN MOORE | 1465 | SATIN | |
| 1E | BENJAMIN MOORE | 1468 | SATIN | |
| 1F | BENJAMIN MOORE | CSP-605 | SATIN | |
| 1G | BENJAMIN MOORE | CSP-850 | SATIN | |

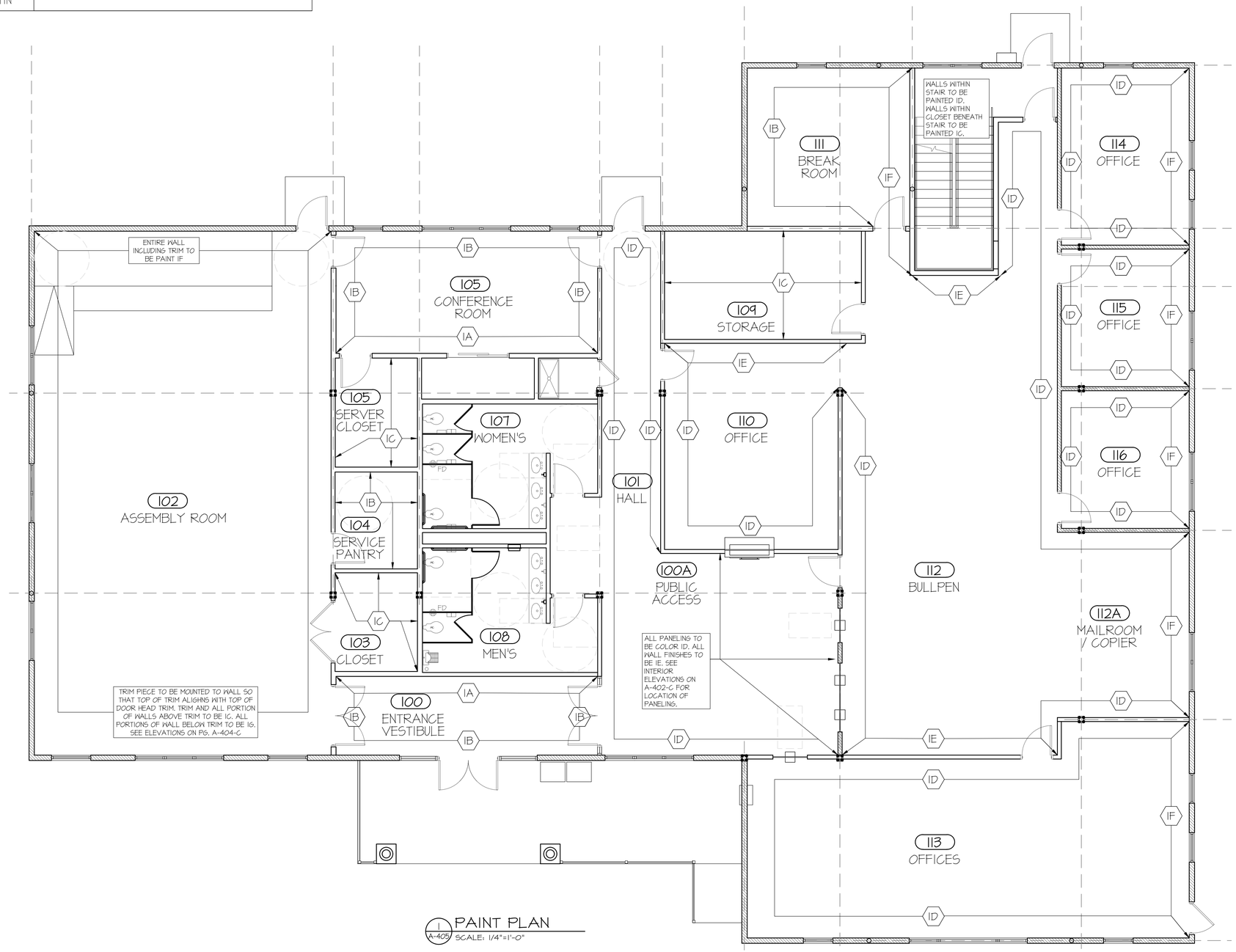


1 A-405 PAINT PLAN
SCALE: 1/4"=1'-0"

# BYRAM MUNICIPAL BUILDING ADMINISTRATIVE/CIVIL

LOCATED AT 10 MANSFIELD DRIVE
BLOCK 365 - LOT 16.01
BOROUGH OF BYRAM
SUSSEX COUNTY, NEW JERSEY


NADER house + design
THE NADER GROUP, LLC
Architects, Engineers & Surveyors
111 Mill Street
Hackettstown, NJ 07840
p. 908.850.3500 | f. 908.441.5803
e. wassim.nader@thenadergroup.com
www.naderhouseofdesign.com
CERTIFICATE OF AUTHORIZATION
Engineering & Survey
No. 24GA28213500
Architecture
No. 21AC00126800


CONSTRUCTION DOCUMENTS

| NO. | DATE | REVISION | CHK |
|---|---|---|---|
| 04 | 08/01/23 | BID SET | CHK |
| 03 | 05/01/23 | CLIENT REVISIONS | CHK |
| 02 | 07/28/22 | COORDINATION REVISIONS | CHK |
| 01 | 06/28/22 | TOWN COMMENTS | CHK |
| 00 | 05/06/22 | TOWN SUBMISSION | CHK |

DRAWN BY: CC, ES
SCALE: AS SHOWN
DATE: OCTOBER 5TH, 2020
JOB NO. 18TNG029C

PAINT PLAN, & SCHEDULE

DRAWING NO.
A-405-C

PLOT DATE: 2023-08-04

© 2023 NADER GROUP-ASA, NADER HOUSE OF DESIGN

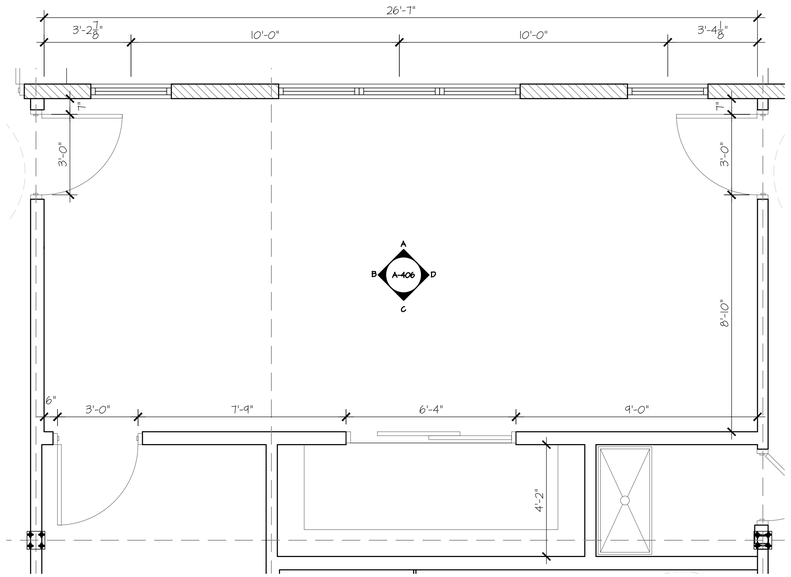


1 A-406 ENLARGED CONFERENCE ROOM PLAN
SCALE: 3/8"=1'-0"

| CONFERENCE ROOM SCHEDULE | |
|---|---|
| 1 | 72" X 42" RECESSED TV MONITOR |

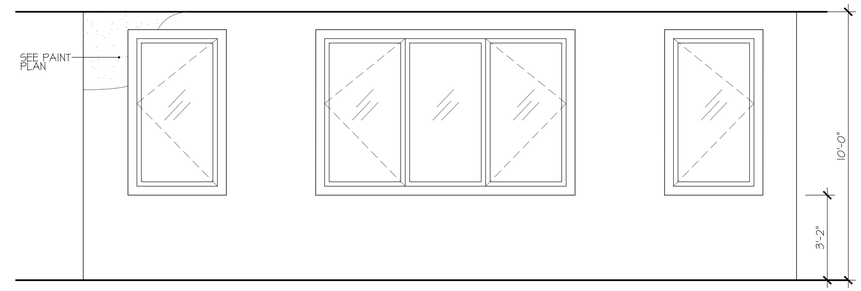


A A-406 INTERIOR ELEVATION
SCALE: 3/8"=1'-0"

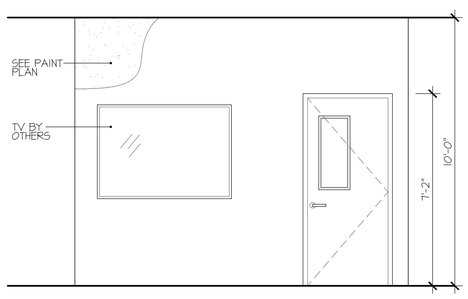


B A-406 INTERIOR ELEVATION
SCALE: 3/8"=1'-0"

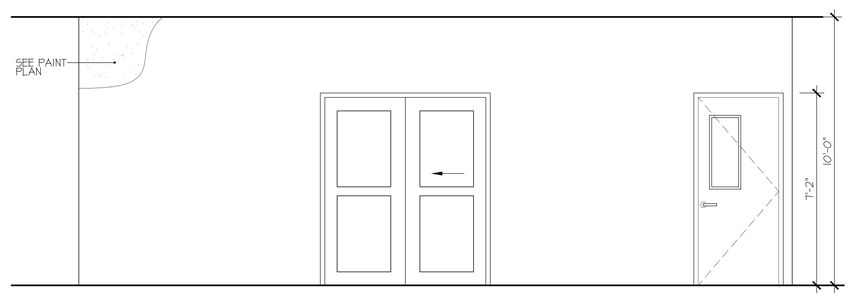


C A-406 INTERIOR ELEVATION
SCALE: 3/8"=1'-0"

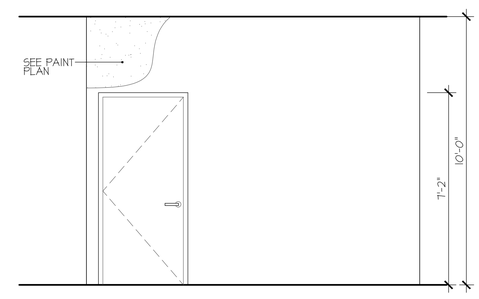


D A-406 INTERIOR ELEVATION
SCALE: 3/8"=1'-0"

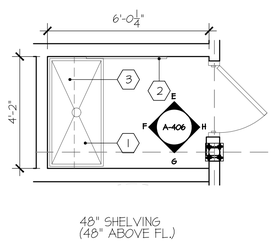


2 A-406 ENLARGED JANITOR'S CLOSET
SCALE: 3/8"=1'-0"

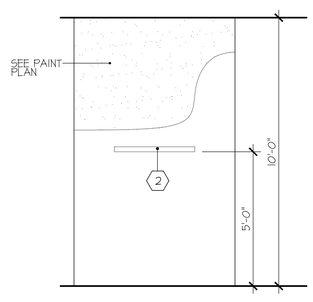


E A-406 INTERIOR ELEVATION
SCALE: 3/8"=1'-0"

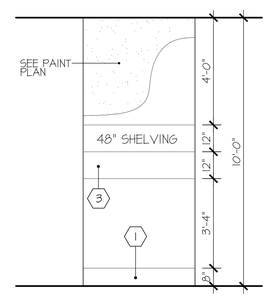


F A-406 INTERIOR ELEVATION
SCALE: 3/8"=1'-0"

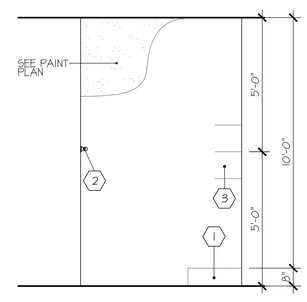


G A-406 INTERIOR ELEVATION
SCALE: 3/8"=1'-0"

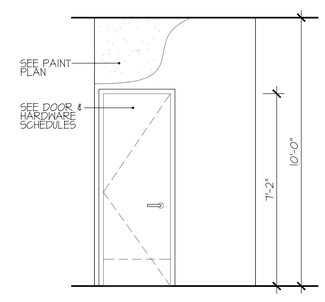


H A-406 INTERIOR ELEVATION
SCALE: 3/8"=1'-0"

| JANITORS CLOSET SCHEDULE | |
|---|---|
| 1 | 24" X 48" WHITE FIBERGLASS MOP SINK. CONTRACTOR TO SPECIFY MAKE AND MODEL. |
| 2 | 36" CLOSET HOOK BAR. CONTRACTOR TO SPECIFY MAKE AND MODEL. |
| 3 | 48" X 12" WOOD SHELVING. CONTRACTOR TO SPECIFY MAKE AND MODEL. |

# BYRAM MUNICIPAL BUILDING ADMINISTRATIVE/CIVIL

LOCATED AT 10 MANSFIELD DRIVE
BLOCK 365 - LOT 16.01
BOROUGH OF BYRAM
SUSSEX COUNTY, NEW JERSEY


NADER house + design
THE NADER GROUP, LLC
Architects, Engineers & Surveyors
111 Mill Street
Hackettstown, NJ 07840
p. 908.850.3500 | f. 908.441.5803
e. wassim.nader@thenadergroup.com
www.naderhouseofdesign.com
CERTIFICATE OF AUTHORIZATION
Engineering & Survey
No. 24GA28213500
Architecture
No. 21AC00126800


CONSTRUCTION DOCUMENTS

| NO. | DATE | REVISION | CHK |
|---|---|---|---|
| 04 | 08/01/23 | BID SET | CHK |
| 03 | 05/01/23 | CLIENT REVISIONS | CHK |
| 02 | 07/28/22 | COORDINATION REVISIONS | CHK |
| 01 | 06/28/22 | TOWN COMMENTS | CHK |
| 00 | 05/06/22 | TOWN SUBMISSION | CHK |

DRAWN BY: CC, ES
SCALE: AS SHOWN
DATE: OCTOBER 5TH, 2020
JOB NO. 18TNG029C

ENLARGED CONFERENCE ROOM & JANITOR CLOSET ELEVATIONS & SCHEDULES

DRAWING NO.
A-406-C

PLOT DATE: 2023-08-04

© 2023 NADER GROUP ASA, NADER HOUSE OF DESIGN

## System No. F-C-2382

**F Rating — 1 Hr**
**T Rating — 1 Hr**

FC 2382

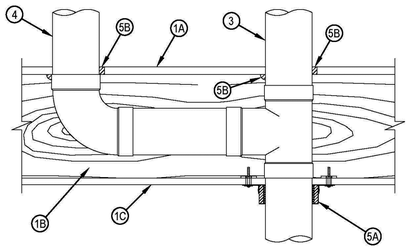


1. Floor-Ceiling Assembly — The 1 hr fire-rated solid or trussed lumber joist floor-ceiling assembly shall be constructed of the materials and in the manner specified in the individual L500 Series Floor-Ceiling Designs in the UL Fire Resistance Directory. The general construction features of the floor-ceiling assembly are summarized below:
   A. Flooring System — Lumber or plywood subfloor with finish floor of lumber, plywood or Floor Topping Mixture* as specified in the individual Floor-Ceiling Design. Diam of opening hole-sawed in flooring shall be min 1/2 in. (13 mm) to max 1 in. (25 mm) larger than diam of through penetrant (Item 3). Diam of opening hole-sawed in flooring shall be min 0 in. (continuous point contact) to max 1 in. (25 mm) larger than diam of branch piping (Item 4).
   B. Wood Joists* — Nom 10 in. (254 mm) deep (or deeper) lumber, steel or combination lumber and steel joists, trusses or Structural Wood Members* with bridging as required and with ends firestopped.
   C. Gypsum Board* — Nom 4 ft (1.22 m) wide by 5/8 in. (16 mm) thick as specified in the individual Floor-Ceiling Design. Diam of opening in ceiling shall be min 0 in. (continuous point contact) to max 1/2 in. (13 mm) larger than diam of through penetrant (Item 3).
2. Chase Wall — (Optional, Not Shown) - The through-penetrant (Item 3) may be routed through a 1 hr fire rated wood stud/gypsum board chase wall constructed of the materials and in the manner specified in the individual U300 Series Wall and Partition Designs in the UL Fire Resistance Directory and which includes the following construction features:
   A. Studs — Nom 2 by 6 in. (51 by 152 mm) lumber studs.
   B. Sole Plate — Nom 2 by 6 in. (51 by 152 mm) lumber plate. Diam of opening hole-sawed in sole plate to be min 1/2 in. (13 mm) to max 1 in. (25 mm) larger than diam of through penetrant (Item 3).
   C. Top Plate — The double top plate shall consist of two nom 2 by 6 in. (51 by 152 mm) lumber plates. Diam of opening shall be min 0 in. (continuous point contact) to max 1/2 in. (13 mm) larger than diam of through penetrant (Item 3).
   D. Gypsum Board* — Thickness, type, number of layers and fasteners shall be as specified in the individual Wall and Partition Design.

**Hilti Firestop Systems**

Reproduced by HILTI, Inc. Courtesy of Underwriters Laboratories, Inc. January 21, 2009

CLASSIFIED UL

Page: 1 of 2

## System No. F-C-5004

**F Ratings — 1 and 2 Hr (See Item 1)**
**T Ratings — 1 and 1-3/4 Hr (See Item 1)**
**L Rating At Ambient — 4 CFM/Sq Ft (See Item 4)**
**L Rating At 400 F — Less Than 1 CFM/Sq Ft (See Item 4)**

FC 5004

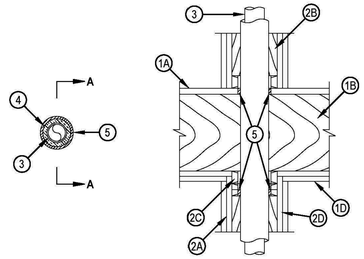


SECTION A-A

1. Floor-Ceiling Assembly — The 1 or 2 hr fire-rated solid or trussed lumber joist floor-ceiling assembly shall be constructed of the materials and in the manner specified in the individual L500 Series Floor-Ceiling Designs in the UL Fire Resistance Directory. The F Rating of the firestop system is equal to the rating of the floor-ceiling assembly. The T Rating is 1 and 1-3/4 hr for 1 and 2 hr rated assemblies, respectively. The general construction features of the floor-ceiling assembly are summarized below.
   A. Flooring System — Lumber or plywood subfloor with finish floor of lumber, plywood or Floor Topping Mixture* as specified in the individual Floor-Ceiling Design. Max diam of floor opening is 3-1/2 in. (89 mm).
   B. Wood Joists* — Nom 10 in (254 mm) deep (or deeper) lumber, steel or combination lumber and steel joists, trusses or Structural Wood Members* with bridging as required and with ends firestopped.
   C. Furring Channels — (Not Shown) — (As required) - Resilient galvanized steel furring installed in accordance with the manner specified in the individual L500 Series Designs in the Fire Resistance Directory.
   D. Gypsum Board* — Thickness, type, number of layers and fasteners shall be as specified in the individual Floor-Ceiling Design. Max diam of floor opening is 3-1/2 in. (89 mm).

**Hilti Firestop Systems**

Reproduced by HILTI, Inc. Courtesy of Underwriters Laboratories, Inc. May 23, 2008

CLASSIFIED C UL US

Page: 1 of 2



### Firestop Collar (CP 643N)

**Product description**
- A ready-to-use firestop collar, made of a galvanized steel housing and intumescent inserts for firestopping combustible pipes

**Product features**
- Ready-to-use collar
- No construction required
- Fast installation time
- Adjustable mounting tabs
- Low profile for tight installations

**Areas of application**
- Firestopping combustible pipes up to 6" diameter in penetrations through fire walls and floors
- Suitable for the following pipe materials: PVC, CPVC, ABS, PVDF, PP and FRPP

**For use with**
- Concrete, masonry, wood floor and gypsum wall assemblies
- Wall and floor assemblies rated up to 4 hours

**Types of Installation**
- Wall: two collars, one on each side
- Floor: one collar on underside (bottom)

**Example**
- Waste water pipes
- Fresh water pipes

**Technical Data**

| Description | Pipe outside dia (in.) | Collar outside dia.(in.) | Collar Height (in.) | No.of hooks and fasteners |
|---|---|---|---|---|
| CP 643-50/1.5"N | 1.4-2.0 | 2.8 | 0.9 | 2 |
| CP 643-83/2"N | 2.0-2.5 | 3.4 | 1.3 | 2 |
| CP 643-90/3"N | 2.6-3.5 | 4.9 | 1.7 | 3 |
| CP 643-110/4"N | 3.6-4.5 | 6.0 | 1.9 | 3 |
| CP 643-160/6"N | 5.6 | 9.8 | 1.9 | 4 |
| Temperature resistance: | | | -40°F to 140°F (-40°C to 60°C) | |
| Intumescent activation | | | Approx. 392°F (200°C) | |
| Expansion ratio (unrestricted) | | | Up to 1:10 | |

Tested in accordance with
- UL 1479 • ASTM E 814 • ASTM G21 • CAN/ULC-S115

FIRESTOP DEVICE. FOR USE IN THROUGH-PENETRATION FIRESTOPS. SEE UL FIRE RESISTANCE DIRECTORY. 1479

FM APPROVED

FBC

### Installation instructions for CP 643N

Notice
- Before handling, read Material Safety Data Sheet and product label for safe usage and health information.
- Instructions below are general guidelines — always refer to the applicable firestop in the UL Fire Resistance Directory or Hilti Firestop Systems Guide to complete installation information.

Opening
1. Clean the plastic pipes: Exposure of the intumescent material during a fire acts to close the plastic pipe. Very dirty pipes (ie. with remains of mortar) may lead to a delay in this closing action. Boxed plastic pipes should, therefore, be cleaned in the area where the CP 643N Firestop Collar is to be installed.

Application of firestop system
2. Seal the opening if required. Gaps may be closed with FS-ONE. The approved methods vary and are given in the specific UL system.
3. Close the CP 643N Firestop Collar: Place the CP 643N Firestop Collar around the plastic pipe and lock the closure by applying firm pressure until it latches.
4. Attach fastening hooks: The fastening hooks can be attached to various points on the metal housing. This allows the fastening points to be made to suit the space available in each case. The hooks must be positioned as symmetrically as possible. The required number of fastening hooks is indicated on the packaging.
5. Fastening the CP 643N Firestop Collar: Only when fastened properly can CP 643N offer protection against fire.
   a. Mark the fastening points.
   b. Drill holes with a Hilti rotary hammer drill (i.e. TE 4-A16) or, depending on base material, fasten using Hilti powder-actuated tool.
   c. To secure the CP 643N Firestop Collar, use Hilti anchors/fasteners.
   d. For maintenance reasons, a penetration can be permanently marked with an identification plate (old fastened in a visible position next to the seal).

Not for use
- With metal pipes
- In highly corrosive surroundings
- With unapproved anchors/fasteners

Storage
- Store only in the original packaging in a location protected from moisture

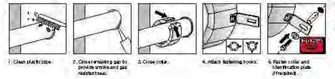


Hilti Firestop Saving lives through innovation and education

**Hilti. Outperform. Outlast.**





## FS-ONE High Performance Intumescent Firestop Sealant

**Product description**
- Intumescent (expands when exposed to fire) firestop sealant that helps protect combustible and non-combustible penetrations for up to 4 hours fire rating

**Areas of application**
- Steel, copper and EMT pipes
- Insulated steel and copper pipes
- Cable bundles
- Closed or vented plastic pipes
- HVAC penetrations

**For use with**
- Concrete, masonry, drywall and wood floor assemblies
- Wall and floor assemblies rated up to 4 hours

**Examples**
- Sealing around plastic pipe penetrations in fire rated construction
- Sealing around combustible and non-combustible penetrations in fire rated construction

**System advantage/Customer benefits**
- Protects most typical firestop penetration applications
- Easy to work with and fast cleanup
- Can be repenetrated when laying new cables
- Can be painted

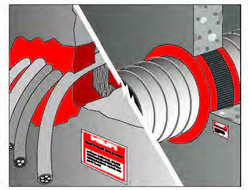

**Internationally tested and approved**

FILL, VOID OR CAVITY MATERIALS CLASSIFIED BY UNDERWRITERS LABORATORIES, INC. FOR USE IN THROUGH-PENETRATION FIRESTOP SYSTEMS. SEE UL FIRE RESISTANCE DIRECTORY 6973

FM APPROVED

## FS-ONE Intumescent Firestop Sealant

Ordering

| Description | Color | Package contents | Volume | Item No. |
|---|---|---|---|---|
| FS-ONE, tube | red | 10.1 oz. (300 ml) | 18 in³ | 00298329 |
| FS-ONE, foil | red | (Qty 20) 20.2 oz. (600 ml) | 36 in³ | 00211387 |
| FS-ONE, pail | red | 5 Gallons (19 liter) | 1155 in³ | 00259578 |
| CB 200 PI-300/310 ml Dispenser | | | | 00055285 |
| 600 ml Foil Dispenser | | | | 00024669 |

## System No. F-C-2382

**F Rating — 1 Hr**
**T Rating — 1 Hr**

FC 2382

3. Through Penetrants — One nonmetallic pipe to be installed within the firestop system. Pipe to be rigidly supported on both sides of floor-ceiling assembly. The annular space between pipe and periphery of opening shall be min 0 in. (point contact) to max 1/2 in. (13 mm). Pipe may be installed with continuous point contact where it passes through gypsum board ceiling. The following types and sizes of nonmetallic pipes may be used:
   A. Polyvinyl Chloride (PVC) Pipe — Nom 4 in. (102 mm) diam (or smaller) Schedule 40 cellular or solid core PVC pipe for use in closed (process or supply) or vented (drain, waste or vent) piping system.
   B. Acrylonitrile Butadiene Styrene (ABS) Pipe — Nom 4 in. (102 mm) diam (or smaller) Schedule 40 cellular or solid core ABS pipe for use in closed (process or supply) or vented (drain, waste or vent) piping system.
4. Branch Piping — (Optional)—One nonmetallic pipe with or without nom 4 in. (102 mm) diam (or smaller) toilet flange (not shown) connected to through penetrant (Item 3) within concealed space above ceiling and centered within opening in subfloor. The annular space between pipe and periphery of opening shall be min 0 in. (continuous point contact) to max 1/2 in. (13 mm). Branch piping may terminate in a max 4 in. (102 mm) diam toilet flange that corresponds to the type of branch piping. The following types and sizes of nonmetallic pipes may be used:
   A. Polyvinyl Chloride (PVC) Pipe — Nom 4 in. (102 mm) diam (or smaller) Schedule 40 cellular or solid core PVC pipe for use in closed (process or supply) or vented (drain, waste or vent) piping system.
   B. Acrylonitrile Butadiene Styrene (ABS) Pipe — Nom 4 in. (102 mm) diam (or smaller) Schedule 40 cellular or solid core ABS pipe for use in closed (process or supply) or vented (drain, waste or vent) piping system.
5. Firestop System — The details of the firestop system shall be as follows:
   A. Firestop Device* — Firestop Collar — Steel collar lined with an intumescent material sized to fit the specific diam of pipe shall be installed in accordance with the accompanying installation instructions. Collar to be installed and latched around the pipe and secured to underside of ceiling or chase wall top plate (Item 2C) using the anchor hooks provided with the collar. Min two anchor hooks required for 1-1/2 (38 mm) and 2 in. (51 mm) diam pipes and min three anchor hooks required for 3 in. (76 mm) and 4 in. (102 mm) diam pipes. The anchor hooks are to be secured to the ceiling with 1/4 in. (6 mm) diam by 1-1/2 in. (38 mm) long steel toggle bolts in conjunction with min 3/4 in. (19 mm) diam steel washers. The anchor hooks are to be secured to the chase wall top plate with min No. 12 by min 1-1/2 in. (38 mm) long steel wood screws in conjunction with min 3/4 in. (19 mm) diam steel washers.
     HILTI CONSTRUCTION CHEMICALS, DIV OF
     HILTI INC — CP 643 50/1.5"N, CP643 63/2"N, CP 643 90/3"N or CP643 110/4"N Firestop Collar
   B. Fill, Void or Cavity Material* - Sealant — Min 3/4 in. (19 mm) thickness of fill material applied within the annulus, flush with the top surface of the floor. Min 1/4 in. (6 mm) diam bead of sealant applied at point contact locations on underside of plywood flooring at pipe/floor interface and the pipe/plate interface. As an option, at non-continuous point contact locations, the bead of sealant can be applied at top of floor at pipe/floor interface and pipe/plate interface.
     HILTI CONSTRUCTION CHEMICALS, DIV OF
     HILTI INC — FS-ONE Sealant

*Bearing the UL Classification Mark

**Hilti Firestop Systems**

Reproduced by HILTI, Inc. Courtesy of Underwriters Laboratories, Inc. January 21, 2009

CLASSIFIED UL

Page: 2 of 2

## System No. F-C-5004

**F Ratings — 1 and 2 Hr (See Item 1)**
**T Ratings — 1 and 1-3/4 Hr (See Item 1)**
**L Rating At Ambient — 4 CFM/Sq Ft (See Item 4)**
**L Rating At 400 F — Less Than 1 CFM/Sq Ft (See Item 4)**

FC 5004

2. Chase Wall — (Optional) - The through penetrant (Item 3) may be routed through a fire-rated single, double or staggered wood stud/gypsum wallboard chase wall having a fire rating consistent with that of the floor-ceiling assembly. The chase wall shall be constructed of the materials and in the manner specified in the individual U300 Series Wall and Partition Designs in the UL Fire Resistance Directory and shall include the following construction features:
   A. Studs — Nom 2 by 6 in. (51 by 152 mm) or double nom 2 by 4 in. (51 by 102 mm) lumber studs.
   B. Sole Plate — Nom 2 by 6 in. (51 by 152 mm) or parallel 2 by 4 in. (51 by 102 mm) lumber plates, tightly butted. Max diam of opening shall be 3-1/2 in. (89 mm).
   C. Top Plate — The double top plate shall consist of two nom 2 by 6 in. (51 by 152 mm) or two sets of parallel 2 by 4 in. (51 by 102 mm) lumber plates, tightly butted. Max diam of opening is 3-1/2 in. (89 mm).
   D. Gypsum Board* — Thickness, type, number of layers and fasteners shall be as specified in the individual Wall and Partition Design.
3. Through Penetrants — One metallic pipe or tubing to be installed within the firestop system. Pipe or tubing to be rigidly supported on both sides of floor assembly. The following types and sizes of metallic pipes or tubing may be used:
   A. Steel Pipe — Nom 2 in. (51 mm) diam (or smaller) Schedule 10 (or heavier) steel pipe.
   B. Copper Tubing — Nom 2 in. (51 mm) diam (or smaller) Type L (or heavier) copper tubing.
   C. Copper Pipe — Nom 2 in. (51 mm) diam (or smaller) Regular (or heavier) copper pipe.
4. Pipe Covering* — Nom 1/2 in. (13 mm) thick hollow cylindrical heavy density (min 3.5 pcf (56 kg/m3)) glass fiber units jacketed on the outside with an all service jacket. Longitudinal joints sealed with metal fasteners or factory-applied self-sealing lap tape. Transverse joints secured with metal fasteners or with butt tape supplied with the product. A nom annular space of 1/8 in. (3 mm) is required within the firestop system.
See Pipe and Equipment Covering — Materials (BRGU) category in the Building Materials Directory for names of manufacturers. Any pipe covering material meeting the above specifications and bearing the UL Classification Marking with a Flame Spread Index of 25 or less and a Smoke Developed Index of 50 or less may be used.
4A. Tube Insulation — Plastics+ — Nom 3/4 in. (19 mm) thick acrylonitrile butadiene/polyvinyl chloride (AB/PVC) flexible foam furnished in the form of tubing. An annular space of min 1/8 in. (3 mm) to max 3/8 in. (10 mm) is required within the firestop system.
See Plastics+ (QMFZ2) category in the Recognized Component Directory for names of manufacturers. Any Recognized Component tube insulation material meeting the above specifications and having a UL 94 Flammability Classification of 94-5VA may be used.
(Note: L Ratings apply only when glass fiber insulation is used).
5. Fill, Void or Cavity Material* — Sealant — Min 3/4 in. (19 mm) thickness of fill material applied within the annulus, flush with top surface of floor or sole plate. Min 5/8 in. (16 mm) thickness of fill material also applied within the annulus, flush with bottom surface of ceiling or lower top plate.
   HILTI CONSTRUCTION CHEMICALS, DIV OF
   HILTI INC — FS-One Sealant

*Bearing the UL Classification Mark

**Hilti Firestop Systems**

Reproduced by HILTI, Inc. Courtesy of Underwriters Laboratories, Inc. May 23, 2008

CLASSIFIED C UL US

Page: 2 of 2

## System No. F-C-2204

**F Rating — 1 Hr**
**T Rating — 1/2 Hr**

CLASSIFIED UL — Classified by Underwriters Laboratories, Inc. to UL 1479

FC 2204

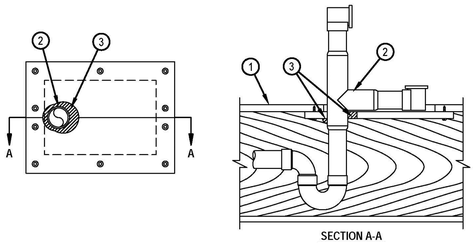


SECTION A-A

1. Floor — Ceiling Assembly — The 1 hr fire-rated solid or trussed lumber joist floor-ceiling assembly shall be constructed of the materials and in the manner specified in the individual L500 Series Floor-Ceiling Designs in theUL Fire Resistance Directory. The general construction features of the floor-ceiling assembly are summarized below:
   A. Flooring System — Lumber or plywood subfloor with finish floor of lumber, plywood or Floor Topping Mixture* as specified in the individual Floor-Ceiling Design. Rectangular cutout in flooring to accommodate the bathtub drain piping (Item 2) to be max 8 in. by 12 in. Cutout to be patched on underside of subfloor using one layer of min 3/4 in. thick plywood or min 5/8 in. thick gypsum board (Item 1C) sized to lap min 2 in. beyond each edge of rectangular cutout. Patch split into two pieces at opening and hole-sawed for bathtub drain piping. Diam of opening hole sawed through patch to accommodate drain piping (Item 2) to be 1 in. larger than outside diam of drain piping and positioned such that the annular space between drain piping and periphery of opening is min 0 in. (point contact) to max 1 in. Two pieces positioned around drain piping, with cut edges tightly butted, and screw-attached to underside of subfloor with 1-1/4 in. long steel screws spaced max 6 in. OC.
   B. Wood Joists* — Nom 10 in. deep (or deeper) lumber, steel or combination lumber and steel joists, trusses or Structural Wood Members* with bridging as required and with ends firestopped.
   C. Gypsum Board* — Nom 5/8 in. thick, 4 ft wide as specified in the individual Floor-Ceiling Design.
2. Drain Piping — Nom 1-1/2 in. (or smaller) diam Schedule 40 acrylonitrile butadiene styrene (ABS) or polyvinyl chloride (PVC) pipe and drain fittings cemented together and provided with ABS or PVC bathtub waste/overflow fittings. Annular space shall be min 0 in. (point contact) to max 1 in.
3. Fill Void or Cavity Materials* — Min 5/8 in. depth or fill material applied within the annulus, flush with both surfaces of plywood or gypsum board patch.
   HILTI CONSTRUCTION CHEMICALS, DIV OF HILTI INC — FS-ONE Sealant

*Bearing the UL Classification Mark

**Hilti Firestop Systems**

Reproduced by HILTI, Inc. Courtesy of Underwriters Laboratories, Inc. December 07, 2001



## FS-ONE High Performance Intumescent Firestop Sealant

**Product description**
- Intumescent (expands when exposed to fire) firestop sealant that helps protect combustible and non-combustible penetrations for up to 4 hours fire rating

**Product features**
- Smoke, gas and water resistant
- Contains no halogen, solvents or asbestos
- High fire rating properties
- Water based, easy to clean

**Tested in accordance with**
- UL 1479
- ASTM E 814
- ASTM E 84

**Technical Data**

**FS-ONE Intumescent Firestop**
(at 73°F (23°C) and 50% relative humidity)

| | |
|---|---|
| Chemical basis: | Water-based intumescent acrylic dispersion |
| Density: | Approx. 1.5 g/cm³ |
| Color: | Red |
| Working time: | Approx. 20-30 min |
| Curing time: | Approx. 14-21 days |
| Shore A Hardness: | Approx. 35 |
| Movement capability: | Approx. 5% |
| Intumescent Activation: | Approx 250°F (121°C). |
| Expansion rate (unrestricted): | Up to 3-5 times original volume |
| Temperature resistance (cured): | -40°F (-40°C) to 212°F (100°C) |
| Application temperature: | 35°F (2°C) to 100°F (38°C). |
| Surface burning characteristics: (ASTM E 84-96) | Flame Spread: 0<br>Smoke Development: 5 |
| Sound transmission classification: ASTM E 90-97 | 50 |

**Approvals**

| | |
|---|---|
| ICBO Evaluation Service, Inc. | Report No. 5071 |
| California State Fire Marshal | Listing No. 1200:108 |
| City of New York | MEA 326-96-M Vol. II |

### Installation instructions for FS-ONE

Cable installation

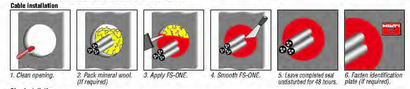

1. Clean opening. 2. Pack mineral wool. (If required) 3. Apply FS-ONE. 4. Smooth FS-ONE. 5. Leave completed seal undisturbed for 48 hours. 6. Fasten identification plate (if required).

Pipe installation

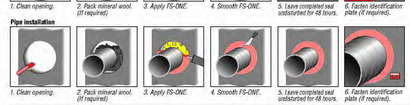

1. Clean opening. 2. Pack mineral wool. (If required) 3. Apply FS-ONE. 4. Smooth FS-ONE. 5. Leave completed seal undisturbed for 48 hours. 6. Fasten identification plate (if required).

**Opening**
1. Clean the opening. Surfaces to which FS-ONE will be applied should be cleaned of loose debris, dirt, oil, moisture, frost and wax. Structures supporting penetrating items must be installed in compliance with local building and electrical standards.

**Application of firestop sealant**
2. Install the prescribed backfilling material type and depth to obtain the desired rating (if required). Leave sufficient depth for applying FS-ONE.
3. Application of firestop sealant: Apply FS-ONE to the required depth in order to obtain the desired fire rating. Make sure FS-ONE contacts all surfaces to provide maximum adhesion. For application of FS-ONE use a standard caulking gun, foil pack gun, bulk loader and bulk gun. With FS-ONE buckets, Graco type sealant pumps may be used. (Contact pump manufacturer for proper selection).
4. Smoothing of firestop sealant: To complete the seal, tool immediately to give a smooth appearance. Excess sealant, prior to curing, can be cleaned away from adjacent surfaces and tools with water.
5. Leave completed seal undisturbed for 48 hours.
6. For maintenance reasons, a penetration seal could be permanently marked with an identification plate. In such a case, mark the identification plate and fasten it in a visible position next to the seal.

**Notice about approvals**
- Check that the penetration has been sealed according to the specified drawing in the UL Fire Resistance Directory or Hilti Firestop Manual. For further advice, please contact Hilti customer service. Refer to Hilti product literature and UL fire resistance directory for specific application details.

**Not for use...**
- High movement expansion joints
- Underwater
- On materials where oil, plasticizers or solvents may bleed i.e. impregnated wood, oil based seals, green or partially vulcanized rubber
- In any penetration other than those specifically described in this manual or the test reports.

**Safety precautions**
- Before handling, read the product and Material Safety Data Sheet for detailed use and health information
- Keep out of reach of children
- Wear suitable gloves and eye protection

**Storage**
- Store only in the original packaging in a location protected from moisture at temperatures between 40°F (5°C) and 86°F (30°C)
- Observe expiration date on the packaging



**BYRAM MUNICIPAL BUILDING**
**ADMINISTRATIVE/CIVIL**
**LOCATED AT 10 MANSFIELD DRIVE**
**BLOCK 365 - LOT 16.01**
**BOROUGH OF BYRAM**
**SUSSEX COUNTY, NEW JERSEY**

NADER house + design
THE NADER GROUP, LLC
Architects, Engineers & Surveyors
111 Mill Street
Hackettstown, NJ 07840
p. 908.850.3500 | f. 908.441.5803
e. wassim.nader@thenadergroup.com
www.naderhouseofdesign.com
CERTIFICATE OF AUTHORIZATION
Engineering & Survey
No. 24GA28213500
Architecture
No. 21AC00126800

CONSTRUCTION DOCUMENTS

| NO. | DATE | REVISION | CHK |
|---|---|---|---|
| 04 | 08/01/23 | BID SET | CHK |
| 03 | 05/01/23 | CLIENT REVISIONS | CHK |
| 02 | 07/28/22 | COORDINATION REVISIONS | CHK |
| 01 | 06/28/22 | TOWN COMMENTS | CHK |
| 00 | 05/06/22 | TOWN SUBMISSION | CHK |

DRAWN BY: CC, ES
SCALE: AS SHOWN
DATE: OCTOBER 5TH, 2020
JOB NO. 18TNG029C

FIRESTOP DETAILS

DRAWING NO.
A-500-C

PLOT DATE: 2023-08-03

© 2023 NADER GROUP ASA, NADER HOUSE OF DESIGN

# ROOM FINISH SCHEDULE

| ROOM # | ROOM NAME | FLOOR | BASE | WALL FINISHES | CEILING MATERIAL | CEILING HEIGHT | NOTES |
|---|---|---|---|---|---|---|---|
| 100 | LOBBY | TILE | TILE | PAINT | DROP ACT CLG | 10'-0" | SEE PAINT PLAN ON PG. A-405 |
| 101 | HALL | TILE | TILE | PAINT | DROP ACT CLG | 10'-0" | SEE PAINT PLAN ON PG. A-405 |
| 102 | ASSEMBLY ROOM | VCT | RUBBER | PAINT | DROP ACT CLG | 10'-0" | SEE PAINT PLAN ON PG. A-405 |
| 103 | SERVICE KITCHEN | VCT | RUBBER | PAINT | DROP ACT CLG | 10'-0" | SEE PAINT PLAN ON PG. A-405 |
| 104 | CONFERENCE ROOM | VCT | RUBBER | PAINT | DROP ACT CLG | 10'-0" | SEE PAINT PLAN ON PG. A-405 |
| 105 | MEN'S ROOM | CERAMIC TILE | NA SCHLUTER SYSTEM | CERAMIC TILE | PAINTED GWB | 8'-0" | SEE PAINT PLAN ON PG. A-405 |
| 106 | WOMEN'S ROOM | CERAMIC TILE | NA SCHLUTER SYSTEM | CERAMIC TILE | PAINTED GWB | 8'-0" | SEE PAINT PLAN ON PG. A-405 |
| 107 | STORAGE | VCT | RUBBER | PAINT | DROP ACT CLG | 10'-0" | SEE PAINT PLAN ON PG. A-405 |
| 108 | RECEPTION | VCT | RUBBER | PAINT | DROP ACT CLG | 10'-0" | SEE PAINT PLAN ON PG. A-405 |
| 109 | OFFICES | VCT | RUBBER | PAINT | DROP ACT CLG | 10'-0" | SEE PAINT PLAN ON PG. A-405 |
| 110 | BULLPEN/ OFFICE SPACE | VCT | RUBBER | PAINT | DROP ACT CLG | 10'-0" | SEE PAINT PLAN ON PG. A-405 |
| 111 | OFFICES | VCT | RUBBER | PAINT | DROP ACT CLG | 10'-0" | SEE PAINT PLAN ON PG. A-405 |
| 112 | OFFICES | VCT | RUBBER | PAINT | DROP ACT CLG | 10'-0" | SEE PAINT PLAN ON PG. A-405 |
| 113 | OFFICES | VCT | RUBBER | PAINT | DROP ACT CLG | 10'-0" | SEE PAINT PLAN ON PG. A-405 |
| 114 | KITCHEN/PANTRY | VCT | RUBBER | PAINT | DROP ACT CLG | 10'-0" | SEE PAINT PLAN ON PG. A-405 |
| | | | | | | | |
| | | | | | | | |

# DOOR TYPE

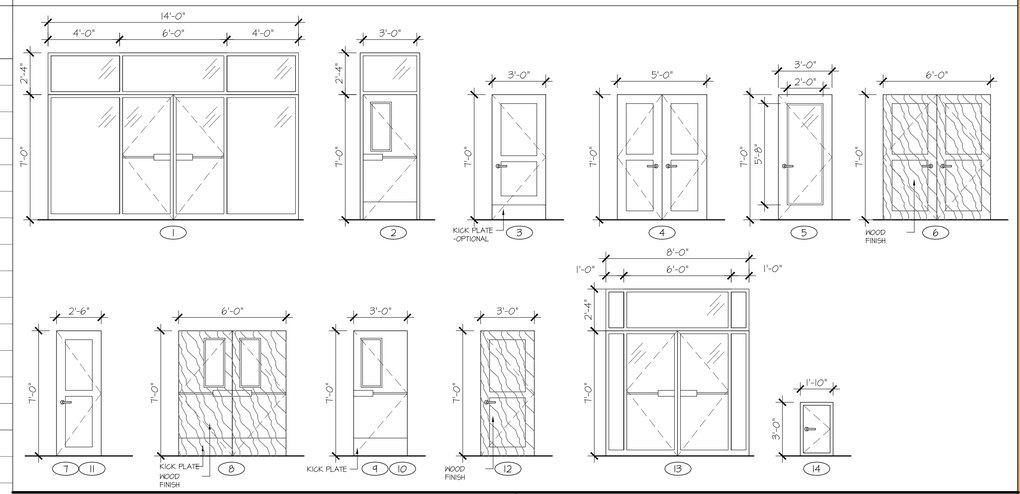


# WINDOW TYPE

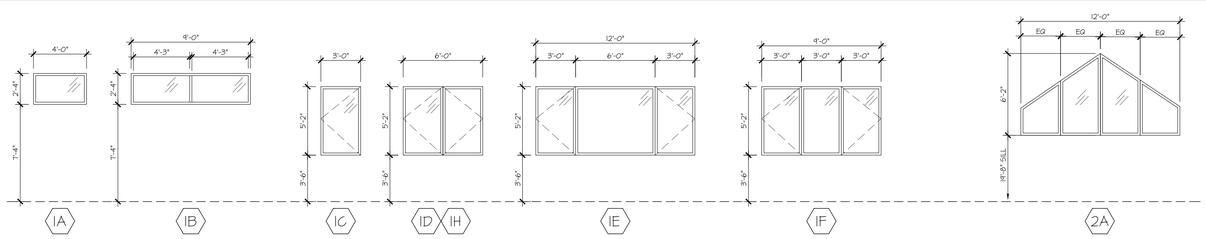


# WINDOW SCHEDULE

| ELEV/ MARK | SIZE WIDTH | SIZE HEIGHT | TYPE | MATERIAL | NOTES |
|---|---|---|---|---|---|
| 1A | 4'-0" | 2'-4" | CASEMENT | AL | |
| 1B | 9'-0" | 2'-4" | CASEMENT | AL | |
| 1C | 3'-0" | 5'-2" | CASEMENT | AL | |
| 1D | 6'-0" | 5'-2" | CASEMENT | AL | |
| 1E | 12'-0" | 5'-2" | CASEMENT | AL | |
| 1F | 9'-0" | 5'-2" | FIXED/CASEMENT | AL | |
| | | | | | |
| 1H | 6'-0" | 5'-2" | FIXED | AL | SAME AS 1D BUT FIXED |
| 2A | 12'-0" | 6'-4" | FIXED | AL | |

# DOOR AND WINDOW NOTES

* KEYING TO BE COORDINATED BY OWNER

NOTES:
1. ALL HARDWARE TO BE COMMERCIAL GRADE, BUILDERS SET WITH LEVER HANDLES.
2. STOREFRONT HARDWARE TO BE MANUFACTURERS STANDARD HARDWARE SET.
3. PROVIDE WEATHER-STRIPPING ON ALL EXTERIOR DOORS.
4. ALL WINDOWS TO BE 1" THICK INSULATED PANELS.

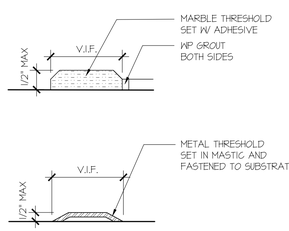


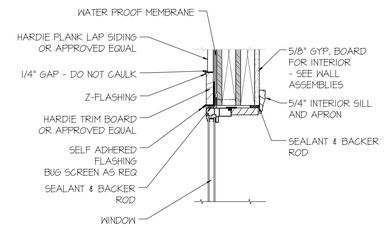


HEAD DETAIL

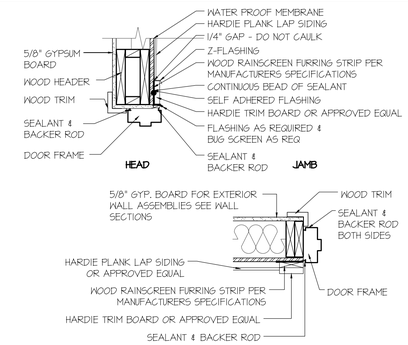


EXTERIOR HEAD & JAMB DETAIL

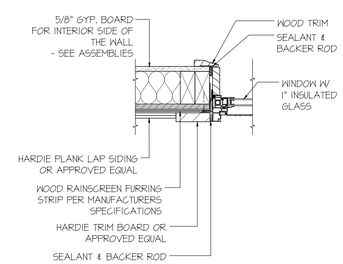


JAMB DETAIL

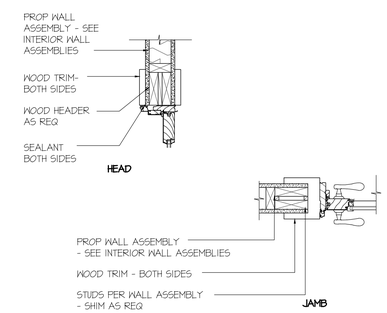


INTERIOR WOOD HEAD & JAMB DETAIL

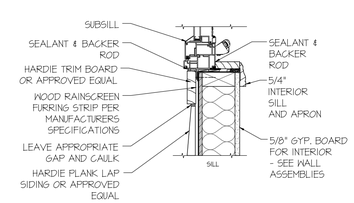


SILL DETAIL

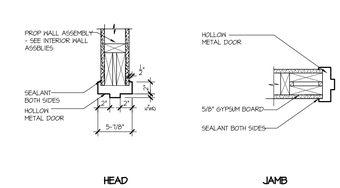


WOOD WALL WINDOW DETAILS @ LOCATIONS W/ HARDIE PLANK (FIRST FLOOR AND UP)

## WINDOW SILL, JAMB AND HEAD DETAILS

SCALE: 1"=1'-0"

INTERIOR HM HEAD & JAMB DETAIL

## DOOR JAMB, HEAD, AND TRANSITION DETAILS

SCALE: 1"=1'-0"

# BYRAM MUNICIPAL BUILDING ADMINISTRATIVE/CIVIL

LOCATED AT 10 MANSFIELD DRIVE
BLOCK 365 - LOT 16.01
BOROUGH OF BYRAM
SUSSEX COUNTY, NEW JERSEY


NADER house + design
THE NADER GROUP, LLC
Architects, Engineers & Surveyors
111 Mill Street
Hackettstown, NJ 07840
p. 908.850.3500 | f. 908.441.5803
e. wassim.nader@thenadergroup.com
www.naderhouseofdesign.com
CERTIFICATE OF AUTHORIZATION
Engineering & Survey
No. 24GA28213500
Architecture
No. 21AC00126800


CONSTRUCTION DOCUMENTS

| NO. | DATE | REVISION | CHK |
|---|---|---|---|
| 04 | 08/01/23 | BID SET | CHK |
| 03 | 05/01/23 | CLIENT REVISIONS | CHK |
| 02 | 07/28/22 | COORDINATION REVISIONS | CHK |
| 01 | 06/28/22 | TOWN COMMENTS | CHK |
| 00 | 05/06/22 | TOWN SUBMISSION | CHK |

DRAWN BY: CC, ES
SCALE: AS SHOWN
DATE: OCTOBER 5TH, 2020
JOB NO. 18TNG029C

SCHEDULES & DETAILS

DRAWING NO.
A-600-C

PLOT DATE: 2023-08-04

© 2023 NADER GROUP ASA, NADER HOUSE OF DESIGN

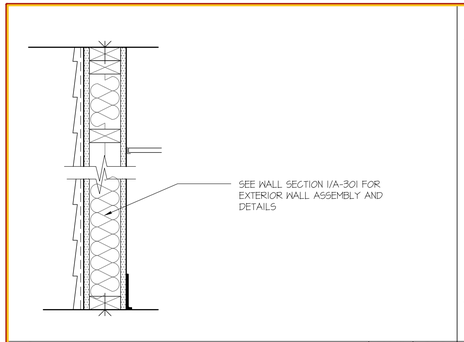


| 1 EXTERIOR NON-RATED PARTITION | U.L.# | STC |
|---|---|---|
| | - | - |

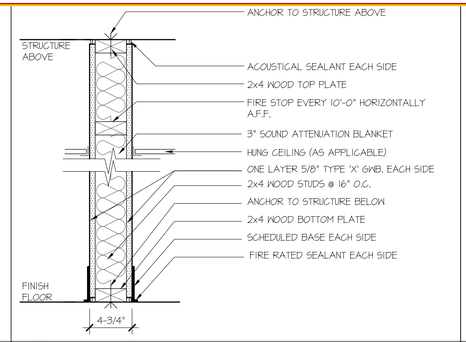


| 2 NON-RATED, NON-BEARING PARTITION | SCALE: 1-1/2"=1'-0" |
|---|---|

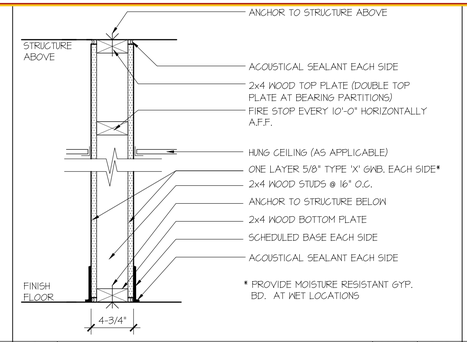


| 3 NON-RATED INTERIOR PARTITION | U.L.# | STC |
|---|---|---|
| | - | - |

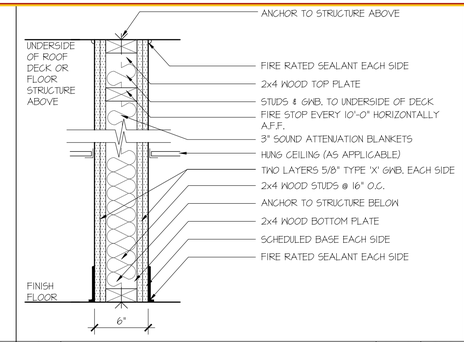


| 4 2HR-RATED NON BEARING PARTITION | U.L.# | STC |
|---|---|---|
| | U301 | 40 - 44 |

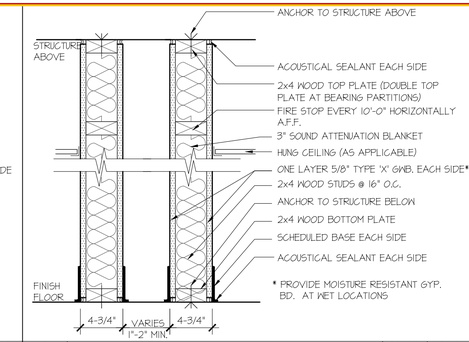


| 5 NON-RATED PLUMBING PARTITION | U.L.# | STC |
|---|---|---|
| | - | - |

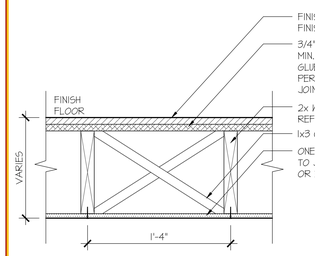


| 6 NON-RATED, FLOOR-CEILING ASSEMBLY | SCALE: 1-1/2"=1'-0" |
|---|---|

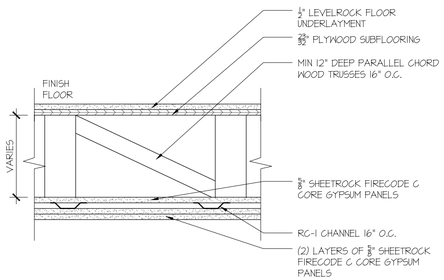


| 7 2-HR RATED, FLOOR-CEILING ASSEMBLY | U.L. # L577 | SCALE: 1-1/2"=1'-0" |
|---|---|---|

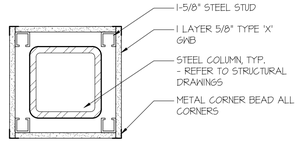


| C1 TYPICAL NON-RATED COLUMN ENCLOSURE DETAIL | SCALE: N.T.S |
|---|---|

1. WHEN MORE THAN (1) LAYER OF GYPSUM BOARD IS INSTALLED, STAGGER JOINTS MIN. 16".

2. PROVIDE DOUBLE TOP PLATE AT ALL WOOD BEARING PARTITIONS.

3. PROVIDE FIRE BLOCKING HORIZONTALLY AT INTERVALS NOT EXCEEDING 10'

4. FIRE RATED PARTITIONS TO EXTEND TO UNDERSIDE OF FLOOR/ROOF DECK OR FLOOR/CEILING ASSEMBLY.

5. PROVIDE MOISTURE RESISTANCE GWB. AT WET LOCATIONS

6. REFER TO UL AND OTHER TESTING AGENCIES NOTED FOR FULL ASSEMBLY INFO.

PARTITION AND WALL TYPE NOTES

NOTES:

1- ALL ELECTRIC LOCKS, DOOR HARDWARE, AND SECURITY EQUIPMENT SPECS TO BE SPECIFIED BY SECURITY SYSTEM MANUFACTURER AND CONTRACTOR PRIOR TO CONSTRUCTION. ARCHITECT TO VERIFY PRIOR TO START OF CONSTRUCTION.

2- ALL DOORS, HARDWARE, & INSTALLATION TO BE INSTALLED AS PER THE MANUFACTURER SPECIFICATIONS AND THE 2018 INTERNATIONAL BUILDING CODE, 2018 INTERNATIONAL MECHANICAL CODE, 2017 NATIONAL ELECTRICAL CODE, & 2009 AMERICAN NATIONAL STANDARD ACCESSIBLE & USABLE BUILDINGS & FACILITIES ICC/ANSI A117.1.

3- ALL KICKPLATES TO BE INSTALLED ON PUSH SIDE OF DOOR.

4- ALL HINGES TO BE HEAVY WEIGHT CLASSIFICATION.

5- PROVIDE AND INSTALL DOOR STOPS AT ALL DOORS.

6- CONTRACTOR TO COORDINATE WITH OWNER THE FINAL COUNT AND LOCATION OF DOORS PRIOR TO START OF CONSTRUCTION.

7- ALL FINISHES ARE SUBJECT TO CHANGE AS PER OWNERS REQUEST.

8-ALL HARDWARE TO BE CAL-ROYAL OR APPROVED EQUAL.

# DOOR FRAME AND HARDWARE SCHEDULE

| ELEV/ MARK | ROOM NAME | SIZE | | | DOUBLE DOOR | MATERIAL | GLAZING | FRAME DETAIL | | | FIRE RATING | HARDWARE GROUP | FINISH | MANUFACTURER | SERIES | NOTES |
|---|---|---|---|---|---|---|---|---|---|---|---|---|---|---|---|---|
| | | WIDTH | HEIGHT | THICK. | | | | HEAD | JAMB | THRESHOLD | | | | | | |
| 1 | VESTIBULE | 6'-0" | 7'-0" | 1 3/4" | YES | AL | YES | 2 | 2 | T2 | - | 1A | AL/ GLAZ | KAWNEER | AA 250 / 425 | PUSH/ PULL, INSULATED, DOUBLE, STOREFRONT DOORS W/ ADA PUSH EQUIPMENT |
| 2 | EXITS | 3'-0" | 7'-0" | 1 3/4" | - | HM | YES | 1 | 1 | T2 | - | 1 | AL/ GLAZ | KAWNEER | AA 250 / 425 | PUSH/ PULL, INSULATED DOOR W/ TRANSOM WINDOW |
| 3 | OFFICE, STRG., ETC. | 3'-0" | 7'-0" | 1 3/4" | - | HM | NO | 1 | 1 | T2 | - | 2A | PAINTED | CURRIES | 607 | TYPICAL SWING, HANDLE, DOOR W/ KICKPLATE |
| 4 | CLOSET | 5'-0" | 7'-0" | 1 3/4" | YES | HM | NO | 2 | 2 | T2 | - | 2 | PAINTED | CURRIES | 607 | TYPICAL SWING, HANDLE, DOUBLE DOOR |
| 5 | OFFICE | 3'-0" | 7'-0" | 1 3/4" | - | HM | YES | 1 | 1 | T2 | - | 2 | PAINTED | CURRIES | 607 | TYPICAL SWING, HANDLE, OFFICE DOOR W/ IMPACT RESISTANT GLASS PANEL |
| 6 | CLOSET | 6'-0" | 7'-0" | 1 3/4" | YES | HM | NO | 2 | 2 | T2 | - | 2 | PAINTED | CURRIES | 607 | TYPICAL SWING, HANDLE, DOUBLE DOOR |
| 7 | JANITOR CL. | 2'-6" | 7'-0" | 1 3/4" | - | HM | NO | 1 | 1 | T2 | - | 2A | PAINTED | CURRIES | 607 | TYPICAL SWING, HANDLE, DOOR W/ KICKPLATE |
| 8 | ASSEMBLY | 6'-0" | 7'-0" | 1 3/4" | YES | HM | YES | 2 | 2 | T2 | 1 1/2 HR | 3B | WOOD GRAIN | CURRISTAIN | 707 | FIRE-RATED, PUSH/ PULL, SELF-CLOSING/ SELF-LATCHING, DBL. W/ KICKPLATE, PANIC HARDWARE, & ADA PUSH EQUIP. |
| 9 | STAIRWAY | 3'-0" | 7'-0" | 1 3/4" | - | HM | YES | 1 | 1 | T2 | 1 1/2 HR | 3A | PAINTED | CURRIES | 707 | FIRE-RATED, PUSH/ PULL, SELF-CLOSING/ SELF-LATCHING, DOOR W/ KICKPLATE, & PANIC HARDWARE |
| 10 | MECH. CLOSET | 3'-0" | 7'-0" | 1 3/4" | - | HM | YES | 1 | 1 | T2 | 1 1/2 HR | 3 | PAINTED | CURRIES | 707 | FIRE-RATED, PUSH/ PULL, SELF-CLOSING/ SELF-LATCHING, DOOR W/ KICKPLATE |
| 11 | STAIR CLOSET | 2'-6" | 7'-0" | 1 3/4" | - | HM | NO | 1 | 1 | T2 | 1 1/2 HR | 2 | PAINTED | CURRIES | 707 | FIRE-RATED, TYPICAL SWING, HANDLE DOOR |
| 12 | PANTRY | 3'-0" | 7'-0" | 1 3/4" | - | WOOD | NO | 1 | 1 | T2 | - | 2 | PAINTED | DOORMERICA | ENCORE | TYPICAL SWING, HANDLE, DOOR |
| 13 | VESTIBULE | 6'-0" | 7'-0" | 1 3/4" | YES | AL | YES | 1 | 1 | T2 | - | 1A | AL/ GLAZ | KAWNEER | AA 250 / 425 | PUSH/ PULL, INSULATED, DOUBLE, STOREFRONT DOORS W/ADA PUSH EQUIPMENT |
| 14 | ATTIC | 1'-10" | 3'-0" | 2 1/2" | - | HM | NO | 1 | 1 | T2 | 1 1/2 HR | 3A | PAINTED | CURRIES | 707 | FIRE-RATED, PUSH/ PULL, SELF-CLOSING/ SELF-LATCHING, DOOR W/ KICKPLATE, & PANIC HARDWARE |

## HARDWARE GROUP 1

| QUANTITY (PER SINGLE DOOR) | DESCRIPTION | FINISH | MANUFACTURER | NOTES |
|---|---|---|---|---|
| 3 | HINGE | BRONZE | CAL-ROYAL | *HARDWARE GROUP (1A) THE SAME AS GROUP (1) BUT DOORS TO BE EQUIPPED WITH ELECTRIC ADA DOOR OPENER. |
| 1 | SURFACE CLOSER | BRONZE | CAL-ROYAL | |
| 2 | CYLINDER | BRONZE | CAL-ROYAL | |
| 1 | WALL STOP | BRONZE | CAL-ROYAL | |
| 1 | PUSH/ PULL BAR | BRONZE | CAL-ROYAL | |

## HARDWARE GROUP 2

| QUANTITY (PER SINGLE DOOR) | DESCRIPTION | FINISH | MANUFACTURER | NOTES |
|---|---|---|---|---|
| 3 | HINGE | BRONZE | CAL-ROYAL | *GROUP (2A) THE SAME AS GROUP (2) BUT DOORS TO BE EQUIPPED WITH KICKPLATE. |
| 1 | ENTRY/OFFICE LOCK | BRONZE | CAL-ROYAL | |
| 1 | SURFACE CLOSER | BRONZE | CAL-ROYAL | |
| 1 | WALL STOP | BRONZE | CAL-ROYAL | |
| 1 | SEALS | BRONZE | CAL-ROYAL | |
| 1 | HANDLE | BRONZE | CAL-ROYAL | |

## HARDWARE GROUP 3

| QUANTITY (PER SINGLE DOOR) | DESCRIPTION | FINISH | MANUFACTURER | NOTES |
|---|---|---|---|---|
| 3 | HINGE | SATIN CHROME | CAL-ROYAL | *GROUP (3A) THE SAME AS GROUP (3) BUT DOORS TO BE EQUIPPED WITH PANIC HARDWARE SPECIFIED BY SECURITY SYSTEM MANUFACTURER. *GROUP (3B) THE SAME AS GROUP (3) BUT DOORS TO BE EQUIPPED WITH PANIC HARDWARE SPECIFIED BY SECURITY SYSTEM MANUFACTURER AND ELECTRIC ADA DOOR OPENER. |
| 1 | ELECTRIC FIRE EXIT HARDWARE | SATIN CHROME | CAL-ROYAL | |
| 1 | SURFACE CLOSER | SATIN CHROME | CAL-ROYAL | |
| 1 | WALL STOP | SATIN CHROME | CAL-ROYAL | |
| 1 | SEALS | SATIN CHROME | CAL-ROYAL | |
| 1 | PUSH/ PULL BAR | SATIN CHROME | CAL-ROYAL | |
| 1 | SELF-CLOSING/ SELF-LATCHING MECH. | SATIN CHROME | CAL-ROYAL | |
| 1 | KICKPLATE | SATIN CHROME | CAL-ROYAL | |

# BYRAM MUNICIPAL BUILDING ADMINISTRATIVE/CIVIL

LOCATED AT 10 MANSFIELD DRIVE
BLOCK 365 - LOT 16.01
BOROUGH OF BYRAM
SUSSEX COUNTY, NEW JERSEY


NADER house.design

THE NADER GROUP, LLC
Architects, Engineers & Surveyors

111 Mill Street
Hackettstown, NJ 07840

p. 908.850.3500 | f. 908.441.5803
e. wassim.nader@thenadergroup.com

www.naderhouseofdesign.com

CERTIFICATE OF AUTHORIZATION
Engineering & Survey
No. 24GA28213500
Architecture
No. 21AC00126800


CONSTRUCTION DOCUMENTS

| NO. | DATE | REVISION | CHK |
|---|---|---|---|
| 04 | 08/01/23 | BID SET | CHK |
| 03 | 05/01/23 | CLIENT REVISIONS | CHK |
| 02 | 07/28/22 | COORDINATION REVISIONS | CHK |
| 01 | 06/28/22 | TOWN COMMENTS | CHK |
| 00 | 05/06/22 | TOWN SUBMISSION | CHK |

DRAWN BY: CC, ES
SCALE: AS SHOWN
DATE: OCTOBER 5TH, 2020
JOB NO. 18TNG029C

WALL AND FLOOR ASSEMBLIES

DRAWING NO.
A-601-C

PLOT DATE: 2023-08-04

© 2023 NADER GROUP-ASA, NADER HOUSE OF DESIGN

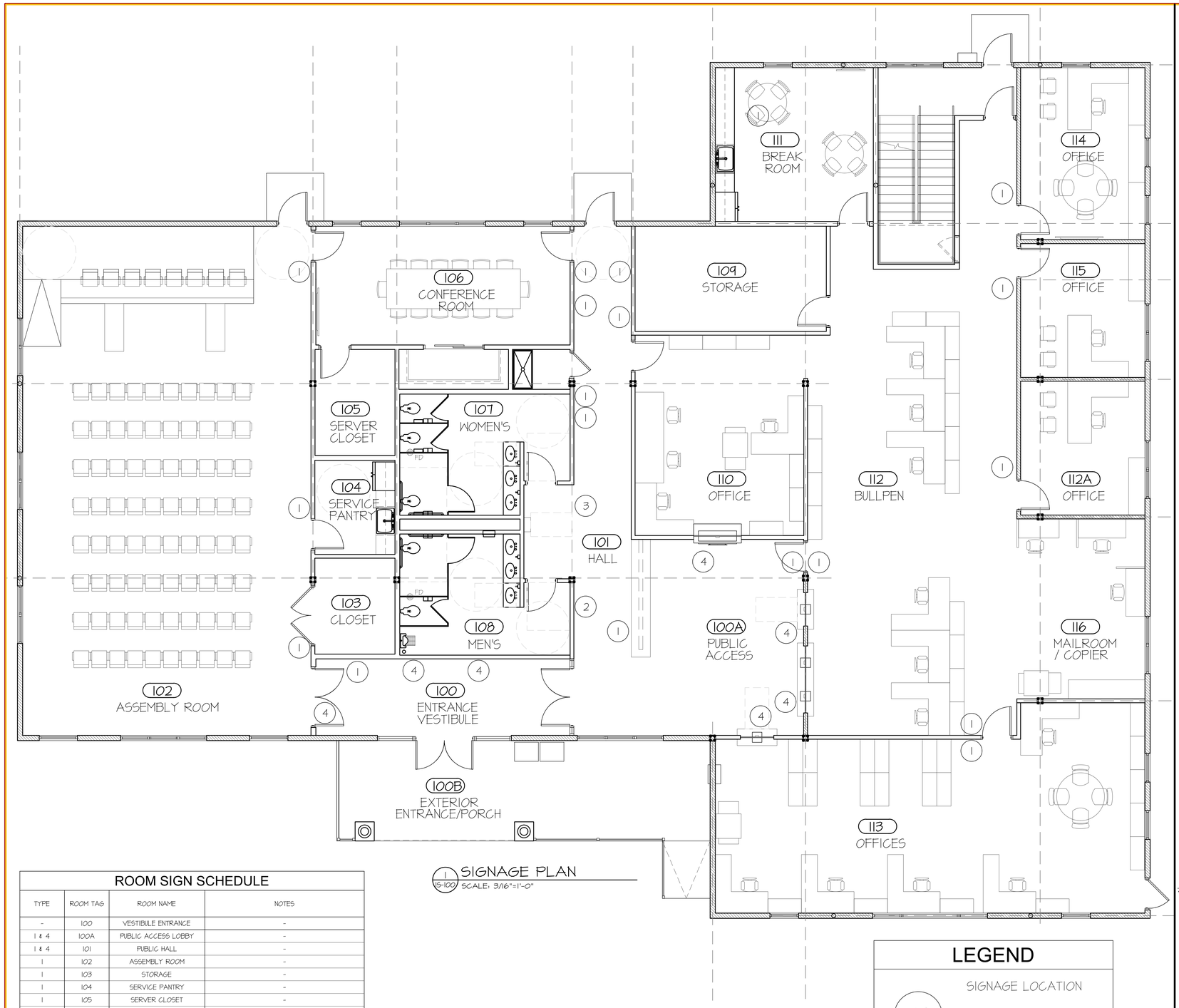


1 / 15-100 SIGNAGE PLAN
SCALE: 3/16"=1'-0"

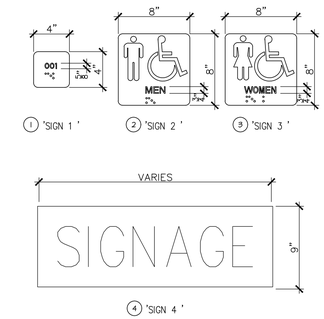


4 / 15-100 SIGNAGE TYPE (REFER TO SCHEDULE)
SCALE: N.T.S

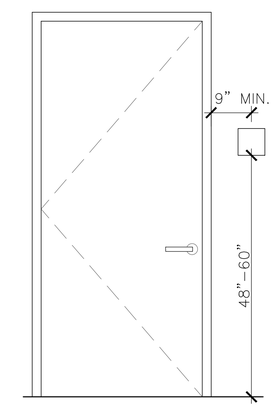


3 / 15-100 SIGNAGE LOCATION DETAIL
SCALE: N.T.S

## ROOM SIGN SCHEDULE

| TYPE | ROOM TAG | ROOM NAME | NOTES |
|---|---|---|---|
| - | 100 | VESTIBULE ENTRANCE | - |
| 1 & 4 | 100A | PUBLIC ACCESS LOBBY | - |
| 1 & 4 | 101 | PUBLIC HALL | - |
| 1 | 102 | ASSEMBLY ROOM | - |
| 1 | 103 | STORAGE | - |
| 1 | 104 | SERVICE PANTRY | - |
| 1 | 105 | SERVER CLOSET | - |
| 1 | 106 | CONFERENCE ROOM | - |
| 3 | 107 | WOMEN'S TOILET ROOM | - |
| 2 | 108 | MEN'S TOILET ROOM | - |
| 1 | 109 | SERVER CLOSET | - |
| 1 | 110 | ADMINISTRATIVE OFFICES | - |
| 1 | 111 | BREAK ROOM | - |
| 1 | 112 | BULLPEN | - |
| 1 | 112A | ADMINISTRATIVE OFFICES | - |
| 1 | 113 | ADMINISTRATIVE OFFICES | - |
| 1 | 114 | ADMINISTRATIVE OFFICES | - |
| 1 | 115 | ADMINISTRATIVE OFFICES | - |
| - | 116 | MAILROOM/ COPIER | - |

## LEGEND

X — SIGNAGE LOCATION

NUMBER: REFER TO SCHEDULE & SIGNAGE TYPE DETAIL

PVC WOOD-LIKE BACKER BOARD W/ RAISED BRONZE LETTERING. DESIGN & MATERIAL SELECTION TO BE COORDINATED & APPROVED BY TOWNSHIP

2 / 15-100 EXTERIOR SIGNAGE
SCALE: N.T.S

# BYRAM MUNICIPAL BUILDING ADMINISTRATIVE/CIVIL

LOCATED AT 10 MANSFIELD DRIVE
BLOCK 365 - LOT 16.01
BOROUGH OF BYRAM
SUSSEX COUNTY, NEW JERSEY

NADER house+design
THE NADER GROUP, LLC
Architects, Engineers & Surveyors
111 Mill Street
Hackettstown, NJ 07840
p. 908.850.3500 | f. 908.441.5803
e. wassim.nader@thenadergroup.com
www.naderhouseofdesign.com

CERTIFICATE OF AUTHORIZATION
Engineering & Survey
No. 24GA28213500
Architecture
No. 21AC00126800

CONSTRUCTION DOCUMENTS

| NO. | DATE | REVISION | CHK |
|---|---|---|---|
| 04 | 08/01/23 | BID SET | CHK |
| 03 | 05/01/23 | CLIENT REVISIONS | CHK |
| 02 | 07/28/22 | COORDINATION REVISIONS | CHK |
| 01 | 06/28/22 | TOWN COMMENTS | CHK |
| 00 | 05/06/22 | TOWN SUBMISSION | CHK |

DRAWN BY: CC, ES
SCALE: AS SHOWN
DATE: OCTOBER 5TH, 2020
JOB NO. 18TNG029C

INTERNAL SIGNAGE PLAN

DRAWING NO.
IS-100-C

PLOT DATE: 2023-08-04

© 2023 NADER GROUP ASA, NADER HOUSE OF DESIGN

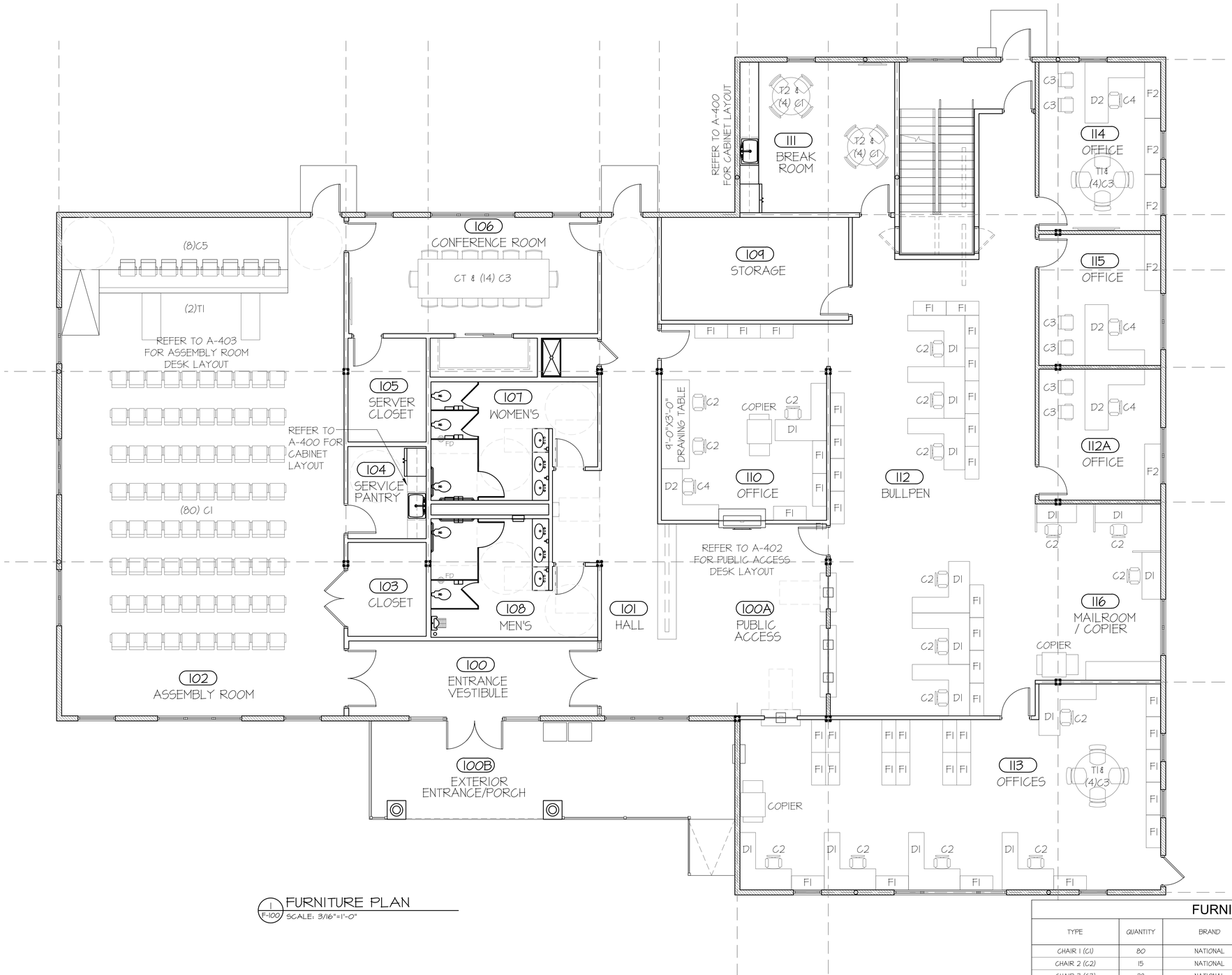


1 F-100 FURNITURE PLAN
SCALE: 3/16"=1'-0"

## FURNITURE SCHEDULE

| TYPE | QUANTITY | BRAND | MODEL NAME | MODEL NUMBER | NOTES |
|---|---|---|---|---|---|
| CHAIR 1 (C1) | 80 | NATIONAL | RENEGADE | TBD | STACKABLE |
| CHAIR 2 (C2) | 15 | NATIONAL | RENEGADE | TBD | - |
| CHAIR 3 (C3) | 28 | NATIONAL | RENEGADE | TBD | - |
| CHAIR 4 (C4) | 3 | NATIONAL | RENEGADE | TBD | - |
| CHAIR 5 (C5) | 18 | NATIONAL | RENEGADE | TBD | - |
| DESK 1 (D1) | 14 | NATIONAL | RENEGADE | TBD | - |
| DESK 2 (D2) | 3 | NATIONAL | RENEGADE | TBD | - |
| TABLE 1 (T1) | 2 | NATIONAL | RENEGADE | TBD | - |
| TABLE 2 (T2) | 2 | NATIONAL | RENEGADE | TBD | - |
| TABLE 3 (T3) | 2 | NATIONAL | RENEGADE | TBD | - |
| CONFERENCE TABLE (CT) | 1 | NATIONAL | RENEGADE | TBD | - |
| FILING CABINET 1 (F1) | 24 | NATIONAL | RENEGADE | TBD | - |
| FILING CABINET 2 (F2) | 5 | NATIONAL | RENEGADE | TBD | - |
| FILING CABINET 3 (F3) | 1 | NATIONAL | RENEGADE | TBD | SLIDING FILING SYSTEM |

# BYRAM MUNICIPAL BUILDING ADMINISTRATIVE/CIVIL

LOCATED AT 10 MANSFIELD DRIVE
BLOCK 365 - LOT 16.01
BOROUGH OF BYRAM
SUSSEX COUNTY, NEW JERSEY

NADER house+design
THE NADER GROUP, LLC
Architects, Engineers & Surveyors
111 Mill Street
Hackettstown, NJ 07840
p. 908.850.3500 | f. 908.441.5803
e. wassim.nader@thenadergroup.com
www.naderhouseofdesign.com

CERTIFICATE OF AUTHORIZATION
Engineering & Survey
No. 24GA28213500
Architecture
No. 21AC00126800

CONSTRUCTION DOCUMENTS

| NO. | DATE | REVISION | CHK |
|---|---|---|---|
| 04 | 08/01/23 | BID SET | CHK |
| 03 | 05/01/23 | CLIENT REVISIONS | CHK |
| 02 | 07/28/22 | COORDINATION REVISIONS | CHK |
| 01 | 06/28/22 | TOWN COMMENTS | CHK |
| 00 | 05/06/22 | TOWN SUBMISSION | CHK |

DRAWN BY: CC, ES
SCALE: AS SHOWN
DATE: OCTOBER 5TH, 2020
JOB NO. 18TNG029C

FURNITURE PLAN

DRAWING NO.
F-100-C

PLOT DATE: 2023-08-03

© 2023 NADER GROUP ASA, NADER HOUSE OF DESIGN

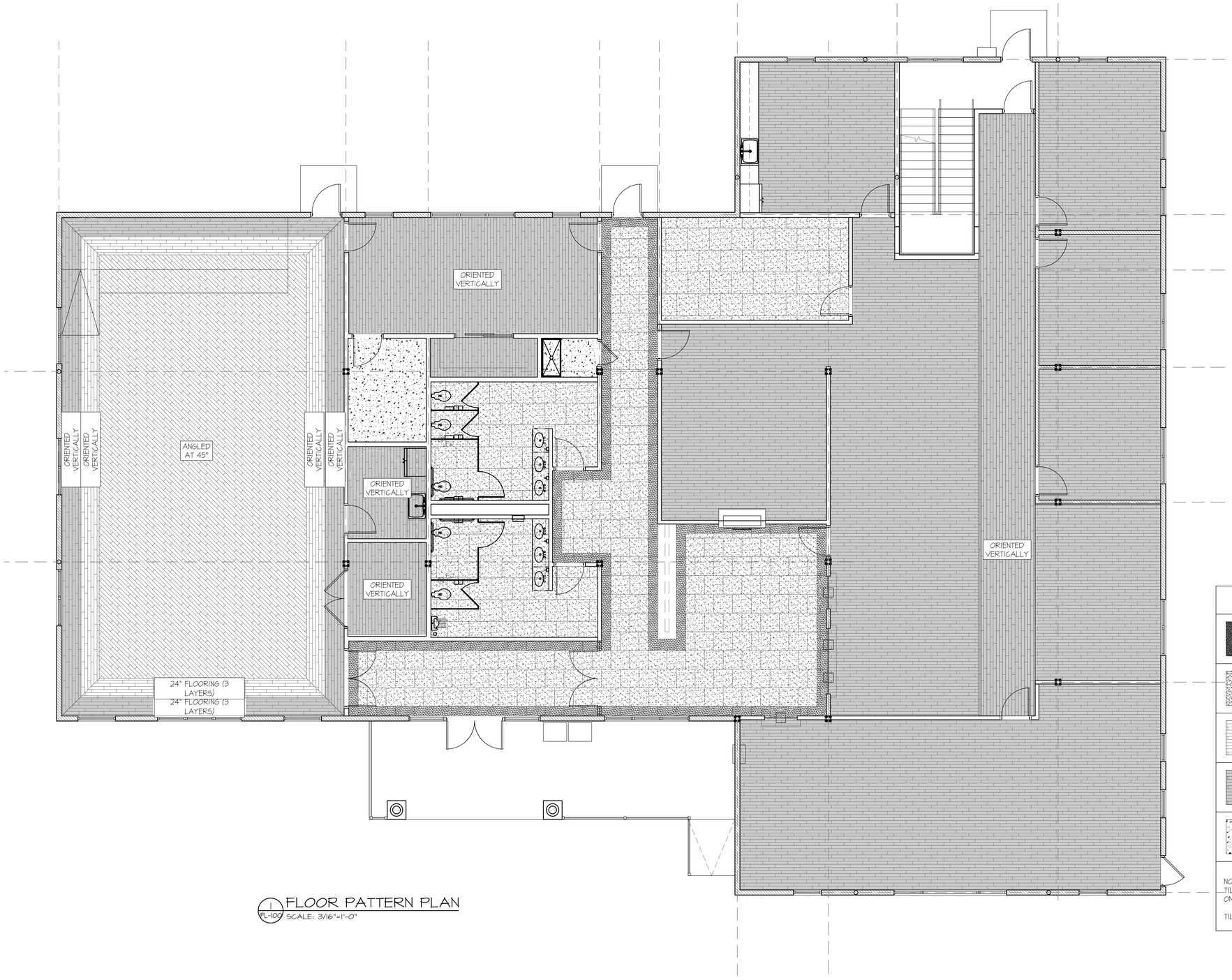


1 FL-100 FLOOR PATTERN PLAN
SCALE: 3/16"=1'-0"

## LEGEND

| | |
|---|---|
| | TILE 1:<br>12"X12" CERAMIC TILE<br>VENEZIANO (ALMOND PLAIN) - MATTE - SMOOTH |
| | TILE 2:<br>24"X24" CERAMIC TILE<br>VENEZIANO (TERRAZZO ALMOND) |
| | VCT 1:<br>WOOD TEXTURED VCT -<br>EVERLIFE - ANDOVER COLLECTION - BAYHILL BLONDE |
| | VCT 2:<br>WOOD TEXTURED VCT -<br>EVERLIFE - ANDOVER COLLECTION - HATFIELD |
| | CONCRETE EPOXY 1:<br>CONCRETE EPOXY 1 -<br>ARMOR POXY 11 |

NOTES:
TILE 1 & TILE 2 TO BE USED IN PATTERN SHOWN ON PLAN FOR PUBLIC HALL.

TILE 2 TO BE USED IN BOTH BATHROOMS

# BYRAM MUNICIPAL BUILDING ADMINISTRATIVE/CIVIL

LOCATED AT 10 MANSFIELD DRIVE
BLOCK 365 - LOT 16.01
BOROUGH OF BYRAM
SUSSEX COUNTY, NEW JERSEY

NADER house of design
THE NADER GROUP, LLC
Architects, Engineers & Surveyors
111 Mill Street
Hackettstown, NJ 07840
p. 908.850.3500 | f. 908.441.5803
e. wassim.nader@thenadergroup.com
www.naderhouseofdesign.com
CERTIFICATE OF AUTHORIZATION
Engineering & Survey
No. 24GA28213500
Architecture
No. 21AC00126800

CONSTRUCTION DOCUMENTS

| NO. | DATE | REVISION | CHK |
|---|---|---|---|
| 04 | 08/01/23 | BID SET | CHK |
| 03 | 05/01/23 | CLIENT REVISIONS | CHK |
| 02 | 07/28/22 | COORDINATION REVISIONS | CHK |
| 01 | 06/28/22 | TOWN COMMENTS | CHK |
| 00 | 05/06/22 | TOWN SUBMISSION | CHK |

DRAWN BY: CC, ES
SCALE: AS SHOWN
DATE: OCTOBER 5TH, 2020
JOB NO. 18TNG029C

GROUND FLOOR PATTERN PLAN

DRAWING NO.
FP-100-C

PLOT DATE: 2023-08-03

© 2023 NADER GROUP ASA, NADER HOUSE OF DESIGN

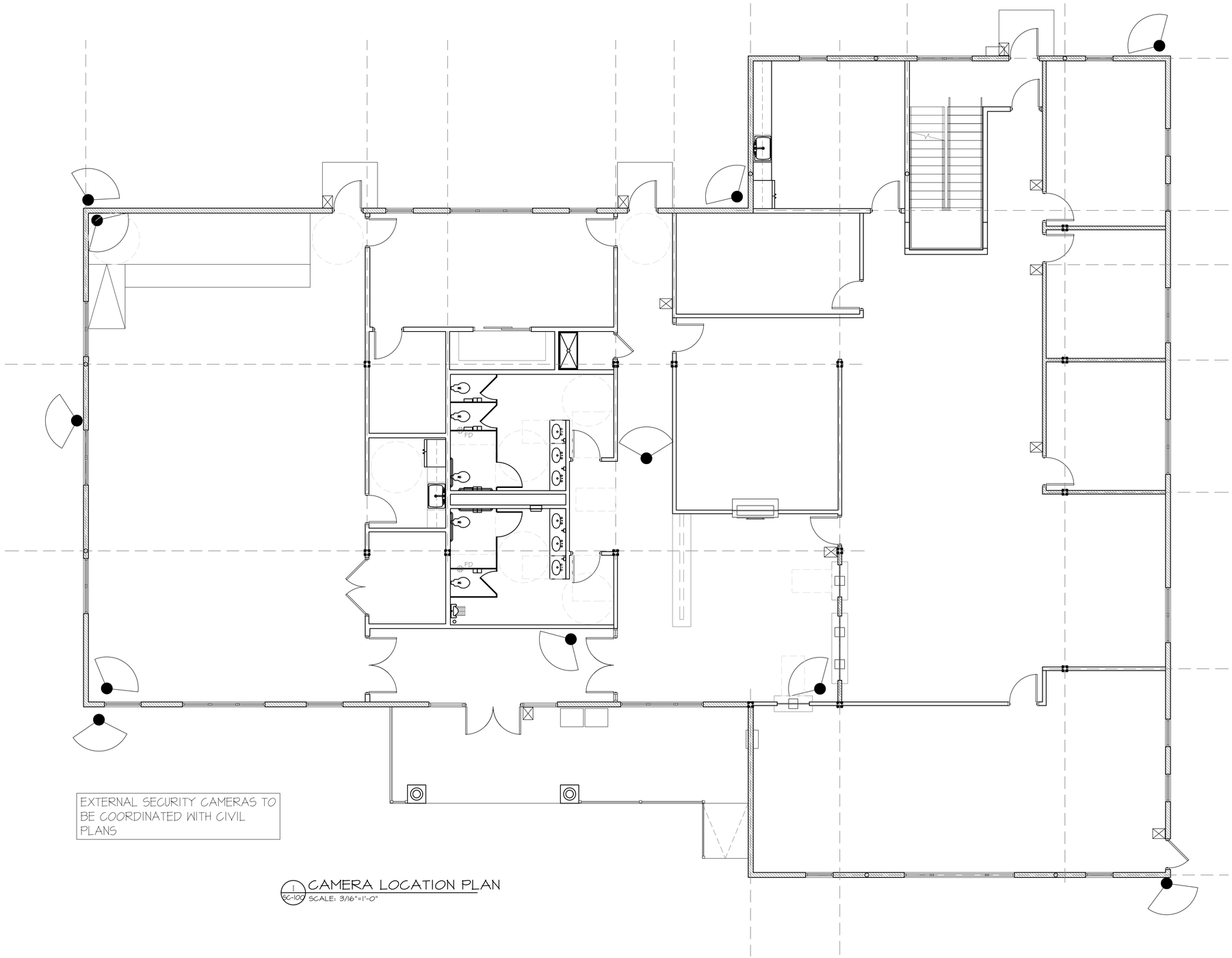


EXTERNAL SECURITY CAMERAS TO BE COORDINATED WITH CIVIL PLANS

1 SEC-100 CAMERA LOCATION PLAN
SCALE: 3/16"=1'-0"

## LEGEND

CAMERA LOCATION

ENTRANCE SECURITY (EXACT SYSTEM TO BE SPECIFIED BY OWNER)

# BYRAM MUNICIPAL BUILDING ADMINISTRATIVE/CIVIL

LOCATED AT 10 MANSFIELD DRIVE
BLOCK 365 - LOT 16.01
BOROUGH OF BYRAM
SUSSEX COUNTY, NEW JERSEY

NADER house+design
THE NADER GROUP, LLC
Architects, Engineers & Surveyors
111 Mill Street
Hackettstown, NJ 07840
p. 908.850.3500 | f. 908.441.5803
e. wassim.nader@thenadergroup.com
www.naderhouseofdesign.com

CERTIFICATE OF AUTHORIZATION
Engineering & Survey
No. 24GA28213500
Architecture
No. 21AC00126800

CONSTRUCTION DOCUMENTS

| NO. | DATE | REVISION | CHK |
|---|---|---|---|
| 04 | 08/01/23 | BID SET | CHK |
| 03 | 05/01/23 | CLIENT REVISIONS | CHK |
| 02 | 07/28/22 | COORDINATION REVISIONS | CHK |
| 01 | 06/28/22 | TOWN COMMENTS | CHK |
| 00 | 05/06/22 | TOWN SUBMISSION | CHK |

DRAWN BY: CC, ES
SCALE: AS SHOWN
DATE: OCTOBER 5TH, 2020
JOB NO. 18TNG029C

SECURITY CAMERA LOCATION PLAN

DRAWING NO.
SEC-100

PLOT DATE: 2023-08-03

© 2023 NADER GROUP ASA, NADER HOUSE OF DESIGN

## GENERAL NOTES

1. IF DURING THE PROGRESS OF THE WORK THE CONTRACTOR MAY DISCOVER ANY ERROR, INCONSISTENCY OR OMISSION IN THE CONTRACT DOCUMENTS, THE CONTRACTOR SHALL AT ONCE SO REPORT TO THE ARCHITECT/ENGINEER. EXTRAS WILL NOT BE ALLOWED FOR CORRECTION OF PROBLEMS THAT COULD HAVE BEEN AVOIDED BY CAREFUL REVIEW AND THE MINOR ADJUSTMENT OF SIZE AND/OR LOCATION OF VARIOUS ITEMS FOR PROPER FIT. THIS CONTRACTOR IS RESPONSIBLE FOR THE COORDINATION OF HIS WORK WITH THE OTHER CONTRACTORS.

2. ANY ITEM NOT SPECIFICALLY LISTED OR SHOWN ON THE CONTRACT DOCUMENTS BUT IS INCIDENTAL TO THE COMPLETION OF THE PROJECT OR PACKAGE WILL BE CONSIDERED AS PART OF THE CONTRACT SCOPE OF WORK.

3. STRUCTURAL DRAWINGS SHALL BE USED IN CONJUNCTION WITH JOB SPECIFICATIONS AND ARCHITECTURAL, MECHANICAL, ELECTRICAL, PLUMBING, AND SITE DRAWINGS. CONSULT THESE DRAWINGS FOR LOCATIONS AND DIMENSIONS OF OPENINGS, CHASES, INSERTS, REGLETS, SLEEVES, DEPRESSIONS, AND OTHER DETAILS NOT SHOWN ON STRUCTURAL DRAWINGS. ALL DIMENSIONS AND CONDITIONS MUST BE VERIFIED IN THE FIELD. ANY DISCREPANCIES SHALL BE BROUGHT TO THE ATTENTION OF THE ARCHITECT/ENGINEER BEFORE PROCEEDING WITH THE AFFECTED PART OF THE WORK.

4. THE STRUCTURE IS DESIGNED TO BE SELF SUPPORTING AND STABLE AFTER THE BUILDING IS COMPLETE. IT IS THE CONTRACTOR'S SOLE RESPONSIBILITY TO DETERMINE ERECTION PROCEDURES AND SEQUENCE TO INSURE THE SAFETY OF THE BUILDING AND ITS COMPONENTS DURING ERECTION. THIS INCLUDES THE ADDITION OF NECESSARY SHORING, SHEETING, TEMPORARY BRACING, GUYS OR TIEDOWNS, FALSEWORK, FORMWORK, AND STAGING. PROVIDE ALL SHORING AND BRACING REQUIRED TO STABILIZE AND PROTECT EXISTING AND ADJACENT STRUCTURES AND SYSTEMS DURING COURSE OF DEMOLITION AND CONSTRUCTION. SUCH MATERIAL SHALL REMAIN THE PROPERTY OF THE CONTRACTOR AFTER COMPLETION OF THE PROJECT. IN THE EVENT THAT THE CONTRACTOR DETERMINES THAT SHEETING OR SHORING IS REQUIRED, THE CONTRACTOR SHALL RETAIN THE SERVICES OF A REGISTERED PROFESSIONAL STRUCTURAL ENGINEER FOR DESIGN AND DOCUMENTATION OF ALL SHEETING, SHORING AND TEMPORARY BRACING REQUIRED FOR THE WORK. IF NOT IN THE ORIGINAL CONTRACT FOR WORK, REVIEW OF ANY ENGINEERED SHEETING, SHORING AND TEMPORARY BRACING REQUIRED WILL BE CONSIDERED ADDITIONAL SCOPE OF WORK AND WILL BE CONSIDERED ADDITIONAL SERVICES.

5. THE CONTRACTOR IS RESPONSIBLE FOR DETERMINING ALLOWABLE CONSTRUCTION LOADS

6. DRAWINGS INDICATE GENERAL AND TYPICAL DETAILS OF CONSTRUCTION. WHERE CONDITIONS ARE NOT SPECIFICALLY SHOWN, SIMILAR DETAILS OF CONSTRUCTION SHALL BE USED, SUBJECT TO APPROVAL BY THE ENGINEER.

7. ALL APPLICABLE FEDERAL, STATE AND MUNICIPAL REGULATIONS SHALL BE FOLLOWED, INCLUDING THE FEDERAL DEPARTMENT OF LABOR OCCUPATIONAL SAFETY AND HEALTH ACT.

8. SHOULD THE CONTRACTOR SEEK APPROVAL OF A PRODUCT OTHER THAN THE BRAND OR BRANDS NAMED IN THESE SPECIFICATIONS, IT SHALL FURNISH WRITTEN EVIDENCE THAT SUCH PRODUCT CONFORMS IN ALL RESPECTS TO THE SPECIFIED REQUIREMENTS, AND THAT IT HAS BEEN USED SUCCESSFULLY ELSEWHERE UNDER SIMILAR CONDITIONS. WHERE THE SPECIFIED REQUIREMENTS INVOLVE CONFORMANCE TO RECOGNIZED CODES OR STANDARDS THE CONTRACTOR SHALL FURNISH EVIDENCE OF SUCH CONFORMANCE IN THE FORM OF TEST OR INSPECTION REPORTS, PREPARED BY A RECOGNIZED AGENCY, AND BEARING AN AUTHORIZED SIGNATURE.

9. MANUFACTURERS' STANDARD DATA AND CATALOG CUT SHEETS WILL NOT BE CONSIDERED SUFFICIENT IN THEMSELVES, AND THE ENGINEER OF RECORD WILL NOT BE RESPONSIBLE FOR SEEKING FURTHER DATA FROM THE MANUFACTURER, OR FOR OTHERWISE RESEARCHING THE PRODUCT. FAILURE TO PROVIDE COMPLETE DATA WILL RESULT IN THE REJECTION OF THE ENTIRE PRODUCT.

10. SUBMIT SHOP DRAWINGS IN THE FORM ELECTRONIC PDF FILES. IN NO CASE SHALL REPRODUCTION OF THE CONTRACT DOCUMENTS BE USED AS A SHOP DRAWING. AS A MINIMUM, SUBMIT THE FOLLOWING ITEMS FOR REVIEW:

a. CONCRETE MIX DESIGNS
b. REINFORCING STEEL SHOP DRAWINGS
c. STRUCTURAL STEEL SHOP DRAWINGS
d. METAL DECK SHOP DRAWINGS
e. MASONRY REINFORCING ACCESSORIES
f. WOOD JOIST SHOP DRAWINGS

12. IF DRAWINGS INDICATE REQUIREMENT(S) FOR SIGNED AND SEALED SHOP DRAWINGS AND SIGNED AND SEALED CALCULATIONS, THEY SHALL BE PROVIDED WITH THE 1ST SUBMISSION TO ENGINEER OF RECORD, OR THEY RISK BEING REJECTED.

13. SUBMIT SHOP DRAWINGS 12 BUSINESS DAYS (MINIMUM) PRIOR TO DATE THAT RETURNED SHOP DRAWINGS ARE REQUIRED. SHOP DRAWINGS SHALL HAVE THE CONTRACTOR'S STAMP OF APPROVAL PRIOR TO REVIEW BY ENGINEER OF RECORD. THE CONTRACTOR REVIEW/APPROVAL STAMP PROVIDES CERTIFICATION TO THE ENGINEER OF RECORD THAT THE CONTRACTOR HAS VERIFIED ALL FIELD MEASUREMENTS, CONSTRUCTION CRITERIA, MATERIALS AND SIMILAR DATA AND HAS REVIEWED EACH DRAWING FOR COMPLETENESS, COORDINATION AND COMPLIANCE WITH THE CONTRACT DOCUMENTS.

14. COSTS OF INVESTIGATION AND/OR REDESIGN DUE TO CONTRACTOR ERRORS WILL BE AT THE CONTRACTOR'S EXPENSE

15. THE ENGINEER HAS NO ONGOING PRESENCE ON THE SITE, NO CONTROL OF ACTIVITIES ON THE SITE, NO SUPERVISORY ROLE AND NO FIELD RESPONSIBILITY FOR SITE SAFETY. THE CONTRACTOR IS RESPONSIBLE FOR SUPERVISION OF THE WORK INCLUDING PERSONNEL PROTECTION IN ACCORDANCE WITH OSHA AND OTHER APPLICABLE REGULATIONS AND PUBLIC PROTECTION IN ACCORDANCE WITH THE REQUIREMENTS OF THE JURISDICTION IN WHICH THE PROJECT IS BEING CONSTRUCTED.

16. THE CONTRACTOR SHALL BE RESPONSIBLE FOR PROTECTION OF ALL CONDITIONS AND MATERIALS WITHIN THE PROPOSED CONSTRUCTION AREA. THE CONTRACTOR SHALL HAVE THE SOLE RESPONSIBILITY FOR ANY DAMAGE OR INJURIES BY OR DURING THE EXECUTION OF THE WORK.

17. CONTRACTOR SHALL VERIFY DIMENSIONS AND FIELD CONDITIONS PRIOR TO STARTING WORK, THE ENGINEER SHALL BE NOTIFIED BY THE CONTRACTOR PROMPTLY OF ANY DEVIATION FROM THE PLAN, UNEXPECTED CONDITIONS, OR INCIDENTS INVOLVING INJURY, COLLAPSE, PROPERTY DAMAGE OR VIOLATIONS ISSUED BY GOVERNMENT ENTITIES.

*** THE ENGINEER OF RECORD IS NOT AND SHALL NOT BE HELD LIABLE FOR SITE SAFTEY ISSUES ***

## FOUNDATION NOTES

1. A GEOTECHNICAL EXPLORATION REPORT SHALL BE PREPARED CONTAINING SUBSURFACE DATA AND FOUNDATION/EARTHWORK RECOMMENDATIONS HAS BEEN PREPARED BY SESI CONSULTING ENGINEERS. ALL RECOMMENDATIONS CONTAINED IN THE REPORT ARE TO BE CONSIDERED PART OF THE CONTRACT DOCUMENTS.

2. PRESUMPTIVE BEARING CAPACITY: 2000 psf

3. FOUNDATION DESIGN IS BASED ON SHALLOW SPREAD FOOTINGS BEARING ON SUITABLE NATURAL SOILS AND/OR NEW COMPACTED STRUCTURAL FILL.

4. ALL ORGANIC MATERIALS, EXCESSIVELY SOFT OR LOOSE SOILS, TREES, ASPHALT, CONCRETE, DEBRIS AND OTHER DELETERIOUS MATERIALS SHOULD BE REMOVED WITHIN AND AT LEAST 5 FEET BEYOND THE BUILDING LIMIT.

5. PROOF ROLL ALL SUBGRADES, UNDER THE OBSERVATION OF THE GEOTECHNICAL ENGINEER. UNSUITABLE AREAS SHALL BE REMOVED AND REPLACED AS DIRECTED BY THE GEOTECHNICAL ENGINEER. NO FILL FOR BUILDING SUPPORT SHALL BE PLACED UNTIL SUBGRADES AND FILL MATERIAL HAVE BEEN OBSERVED AND APPROVED BY THE GEOTECHNICAL ENGINEER.

6. AREAS REQUIRING UNDERCUT AND FILL MATERIAL DUE TO THE PRESENCE OF UNSUITABLE MATERIAL SHALL BE BACKFILLED TO THE DESIGN FOOTING SUBGRADE WITH NEW COMPACTED STRUCTURAL FILL.

7. COMPACTED STRUCTURAL FILL FOR BUILDING SUPPORT UTILIZING MATERIAL APPROVED FOR USE BY THE GEOTECHNICAL ENGINEER INCLUDE: ON-SITE GRANULAR SOILS INCLUDING GW, GP, GM, SW, SP AND SM CLASSIFIED IN ACCORDANCE WITH THE UNIFIED SOIL CLASSIFICATION SYSTEM (USCS). FURTHERMORE, THE MATERIAL TO BE UTILIZED AS STRUCTURAL FILL SHOULD HAVE A PLASTICITY INDEX (PI) LESS THAN 2 SUBJECT TO FINAL APPROVAL BY GEOTECHNICAL ENGINEER.

8. MATERIAL TRANSPORTED FROM OFF-SITE SHALL MEET THE REQUIREMENTS OF GEOTECHNICAL REPORT.

9. SLABS ON GRADE MAY BE SUPPORTED ON FIRM SUITABLE NATURAL SOILS, OR ON COMPACTED STRUCTURAL FILL FOLLOWING STRIPPING OF TOPSOIL, VEGETATION, ASPHALT AND ANY SOFT OR DISTURBED SOILS WITHIN THE BUILDING AREA. A SIX INCH WASHED GRAVEL OR CRUSHED STONE LAYER CORRESPONDING TO AASHTO SIZE NO. 57 AGGREGATE SHOULD BE USED BENEATH ALL FLOOR SLABS ON GRADE.

10. COMPACTED STRUCTURAL FILL BENEATH ALL FOUNDATIONS, SLABS ON GRADE AND ADJACENT TO FOUNDATION WALLS SHALL BE PLACED IN LIFTS NOT EXCEEDING 8 INCHES IN LOOSE THICKNESS AND BE COMPACTED TO 95 PERCENT OF MAXIMUM DRY DENSITY PER ASTM D-1557, MODIFIED PROCTOR TEST.

11. BACKFILL IMMEDIATELY BEHIND BASEMENT WALLS SHOULD BE CLEAN, GRANULAR MATERIAL CONTAINING LESS THAN TEN (10) PERCENT PASSING THE NO. 200 SIEVE (0.07MM). IN ADDITION, THE COMPACTION BEHIND THESE WALLS SHOULD BE NINETY-FIVE (95) PERCENT OF THE MODIFIED PROCTOR MAXIMUM DRY DENSITY IN ACCORDANCE WITH ASTM D-1557. EXCESSIVE COMPACTION MAY CAUSE DAMAGE TO THE WALLS. HAND OPERATED EQUIPMENT SHOULD BE USED FOR COMPACTION NEAR EXISTING AND NEW FOUNDATION WALLS. BACKFILL AGAINST NEW FOUNDATION WALLS ONLY AFTER FIRST FLOOR IS IN PLACE OR ADEQUATE BRACING HAS BEEN PROVIDED. CONCRETE FLOOR SLABS SHALL HAVE CURED 7 DAYS MINIMUM PRIOR TO BACKFILLING.

12. THE EXCAVATION FOR PLACEMENT OF COMPACTED STRUCTURAL FILL SHOULD EXTEND BEYOND THE EDGE OF FOOTINGS A MINIMUM DISTANCE EQUAL TO THE DEPTH OF FILL.

13. EXTEND BOTTOM OF EXTERIOR FOOTINGS AT LEAST 3.0 FEET BELOW THE EXTERIOR FINISH GRADE FOR PROTECTION AGAINST FROST.

14. ALL SUBGRADES AND UNDERCUTS SHALL BE APPROVED BY THE GEOTECHNICAL ENGINEER. SOILS EXPOSED AT THE BASES OF ALL APPROVED FOUNDATION EXCAVATIONS SHOULD BE PROTECTED AGAINST ANY DETRIMENTAL CHANGE IN CONDITION, SUCH AS DISTURBANCE FROM RAIN OR FROST. SURFACE RUNOFF SHOULD BE DRAINED AWAY FROM THE EXCAVATIONS AND NOT BE ALLOWED TO POND. FOUNDATION EXCAVATIONS SHOULD BE PROTECTED FROM RAINFALL OR FREEZING CONDITIONS. SLOPE FOOTING EXCAVATIONS AS REQUIRED FOR STABILITY AND SAFETY OR PROVIDE SHEETING OR SHORING IN ACCORDANCE WITH OSHA REQUIREMENTS. IN THE EVENT THAT THE CONTRACTOR DETERMINES THAT SHEETING OR SHORING IS REQUIRED FOR EXCAVATION, THE CONTRACTOR SHALL RETAIN THE SERVICES OF A REGISTERED PROFESSIONAL STRUCTURAL ENGINEER FOR DESIGN AND DOCUMENTATION OF ALL SHEETING AND SHORING REQUIRED FOR THE WORK.

## ANCHORS

1. CONTRACTOR IS RESPONSIBLE FOR SURVEYING AND ASCERTAINING THE EXISTING BASE CONDITIONS THICKNESSES IN ACCORDANCE WITH THE EXISTING CONDITIONS AND DEMOLITIONS NOTES.

HIT HY 70 & 200 INJECTION ADHESIVE ANCHORS
2. INJECTION ADHESIVE ANCHORS SHALL BE HYBRID ADHESIVE TYPE SYSTEM IN PREDRILLED HOLES EXCEPT WHERE DRAWINGS SPECIFICALLY CALL FOR ANOTHER TYPE OF ANCHOR. ALL DESIGNS ARE BASED ON HILTI, INC., HIT HY 70 & 200 INJECTION ADHESIVE ANCHOR. INSTALL INJECTION ADHESIVE ANCHORS IN ACCORDANCE WITH THE MANUFACTURER'S INSTRUCTIONS.

3. ALL ANCHOR EMBEDMENT LENGTHS SHALL BE BASED ON THE BASE MATERIAL THICKNESS LESS 1 1/2".

## CONCRETE NOTES

1. ALL CONCRETE WORK SHALL CONFORM TO ACI 318 (LATEST EDITION).

2. CONCRETE COMPRESSIVE STRENGTH AT 28 DAYS SHALL BE:

a. FOUNDATIONS: 4000 PSI
b. SLABS ON GRADE: 4000 PSI
c. SLABS ON DECK: 4000 PSI, NW & LW AS INDICATED.
ALL CONCRETE SUBJECT TO FREEZE/THAW CYCLE SHALL BE AIR-ENTRAINED.

3. CONCRETE SHALL NOT BE PLACED IN WATER OR ON FROZEN GROUND.

4. REINFORCING BARS SHALL CONFORM TO ASTM A615, GRADE 60 DEFORMED BARS AND SHALL BE DETAILED, FABRICATED AND PLACED IN ACCORDANCE WITH ACI 315, LATEST EDITION. WELDED WIRE FABRIC SHALL CONFORM TO ASTM A-185 AND BE PROVIDED IN FLAT SHEETS.

5. COMPLETE SHOP DRAWINGS AND SCHEDULES OF ALL REINFORCING STEEL SHALL BE PREPARED BY THE CONTRACTOR AND SUBMITTED TO THE ENGINEER FOR REVIEW.

6. REINFORCEMENT SHALL BE CONTINUOUS AROUND CORNERS AND AT INTERSECTIONS. PROVIDE CLASS "A" TENSION LAP SPLICES FOR ALL HORIZONTAL WALL REINFORCING UNLESS OTHERWISE SHOWN ON PLAN. PROVIDE CLASS "B" TENSION LAP SPLICES FOR ALL HORIZONTAL GRADE BEAM REINFORCING.

7. CLEARANCES FOR REINFORCEMENT:

a. CONCRETE PLACED DIRECTLY ON EARTH, FOOTINGS: 3"
b. SLABS, FROM TOP UNLESS OTHERWISE NOTED: 1"
c. FORMED SURFACES EXPOSED TO WEATHER OR EARTH:
#5 BAR OR SMALLER: 1 1/2"
#6 BAR OR LARGER: 2"

8. FOR ALL OPENINGS IN CONCRETE WALLS AND SLABS, PROVIDE SUPPLEMENTAL REINFORCING AROUND OPENING AS SHOWN ON THE CONTRACT DOCUMENTS.

9. CONTROL JOINTS IN SLABS ON GRADE: SEE SPECIFICATION SECTION 03300.

a. CONTROL JOINTS SHALL BE LOCATED AS SHOWN ON SLAB ON GRADE PLAN.
b. CONTROL JOINTS SHALL BE SAW CUT (1/3 THE SLAB DEPTH) AND FILLED WITH JOINT SEALER. CUT JOINTS AS SOON AS POSSIBLE WITHOUT FRAYING THE CONCRETE SURFACE.
c. CONSTRUCTION JOINTS SHALL INCLUDE A 1"x2" SHEAR KEY AT MID-HEIGHT OF SLAB.
d. CONTROL JOINTS IN WALLS SHALL NOT EXCEED 40'-0" O.C. NOR 15'-0" FROM ANY CORNER.
CONTROL JOINTS SHALL BE LOCATED BY CONTRACTOR IN ACCORDANCE WITH ACI CRITERIA, MAXIMUM SPACINGS AS PER TYPICAL SLAB ON GRADE DETAILS AND TYPICAL CONTROL JOINT LOCATION DETAILS (U.N.O.). MINIMUM CONTROL JOINT DEPTHS ARE INDICATED ON TYPICAL CONTROL JOINT DETAILS. CONTROL JOINTS WHICH ARE NOT PROMPTLY OR PROPERLY CUT AND ARE NOT FUNCTIONING SHALL BE RECUT BY THE CONCRETE CONTRACTOR. RECUTS OF JOINTS WHICH WERE NOT PROMPTLY OR PROPERLY CUT SHALL BE 3" DEEP MINIMUM.

10. THE FINISH TOLERANCE OF ALL SLABS SHALL BE IN ACCORDANCE WITH ACI 302 AND THAT SPECIFIED ON THE CONTRACT DOCUMENTS. SEE SPECIFICATION SECTION 03300 FOR FINISHING.

11. ANCHOR BOLTS SHALL CONFORM TO ASTM F1554 GR. 36 UNLESS NOTED OTHERWISE.

12. LAP ALL BARS MINIMUM 40 DIAMETERS. LAP ALL WWF A MINIMUM OF 6 INCHES.

13. LIGHTWEIGHT CONCRETE SHALL BE USED FOR ALL FRAMED ROOFS (WHERE INDICATED). THIS CONCRETE IS TO HAVE A MINIMUM 28 DAY COMPRESSIVE STRENGTH OF 4000 PSI AND A MAXIMUM IN-PLACE DRY DENSITY OF 115 POUNDS PER CUBIC FOOT.

14. UNLESS OTHERWISE APPROVED ALL REINFORCEMENT SHALL BE BLOCKED INTO POSITION WITH PRECAST CONCRETE BLOCKS HAVING A MINIMUM COMPRESSIVE STRENGTH EQUAL TO THAT OF THE SLAB OR FOUNDATION SYSTEM.

15. IN ORDER TO AVOID CONCRETE SHRINKAGE CRACKING, PLACE CONCRETE SLABS IN ALTERNATING LANE PATTERN. THE MAXIMUM LENGTH OF SLAB CAST IN ANY ONE CONTINUOUS POUR IS RECOMMENDED TO BE LESS THAN 100 FEET.

16. SEE THE ARCHITECTURAL DRAWINGS FOR EXACT LOCATIONS OF DEPRESSED SLAB AREAS, DRAINS, AND DIMENSIONS.

17. PROVIDE GALVANIZED STEEL SLEEVES WHERE PIPES PASS THROUGH EXTERIOR CONCRETE WALLS, BEAMS OR SLABS. PROVIDE PVC SLEEVES WHERE PIPES PASS THROUGH INTERIOR CONCRETE WALLS, BEAM OR SLABS (UNLESS NOTED OTHERWISE).

18. DO NOT PLACE UNDERGROUND UTILITIES OR PIPES BELOW FOOTINGS. IF ANY SUCH CONDITIONS OCCUR, NOTIFY THE ENGINEER IMMEDIATELY AND DROP THE BOTTOM OF FOOTING ELEVATION IN ACCORDANCE WITH THE TYPICAL STEP FOOTING AT PIPE CROSSING DETAIL IN ORDER TO CLEAR THE PIPE.

19. PROVIDE FOR ANY DEWATERING AS REQUIRED DURING EXCAVATION AND CONSTRUCTION OF THE FOUNDATION SYSTEM.

## DESIGN BASIS

BUILDING CODE: 2018 IBC NJ EDITION

1. DESIGN GRAVITY LOADS

A. DEAD LOADS
CONCRETE PAD =75 PSF

B. LIVE LOADS
PAD LIVE LOAD =150 PSF

C. GROUND SNOW LOAD =35 PSF
SNOW IMPORTANCE FACTOR =1.2
THERMAL FACTOR (Ct) =1.0 HEATED BUILDING

2. WIND DESIGN
BASIC WIND SPEED (3 SECOND GUST) =125 MPH
WIND IMPORTANCE FACTOR (IE) =1.15
EXPOSURE =C
RISK CATEGORY IV

3. SESMIC DESIGN
$S_S$ =0.25
$S_1$ =0.06
RISK CATEGORY IV
SEISMIC IMPORTANCE FACTOR $(I)_p$ =1.5
SITE CLASS D(ASSUMED)
SEISMIC DESIGN CATEGORY B

4. SOLAR PANNEL LOADING
MAXIMUM SOLAR PANNEL LOADING 6000 PSF

## MASONRY NOTES

1. ALL MASONRY CONSTRUCTION SHALL CONFORM TO ACI 530.1 SPECIFICATION FOR MASONRY STRUCTURES (LATEST EDITION).

2. ALL CONCRETE MASONRY UNITS SHALL BE ASTM C90, GRADE N, TYPE 1 STANDARD WEIGHT BLOCKS INCLUDING STRETCHERS AND CORNER BLOCKS. SPECIFIED COMPRESSIVE STRENGTH OF MASONRY, f'm, SHALL BE A MINIMUM OF 1900. PSI, AS DETERMINED BY THE UNIT STRENGTH METHOD OR BY PRISM TESTS.

3. MORTAR SHALL CONFORM TO ASTM SPECIFICATION C270, TYPE S. OWNER'S TESTING AGENCY SHALL VERIFY STRENGTH FROM FIELD-OBTAINED TEST CUBES.

4. WHERE INDICATED, GROUT CORES SOLID WITH A HIGH SLUMP MIX IN ACCORDANCE WITH ASTM SPECIFICATION C476 HAVING A MINIMUM 28 DAY COMPRESSIVE STRENGTH OF 2000 PSI. OWNER'S TESTING AGENCY SHALL VERIFY STRENGTH FROM FIELD-OBTAINED TEST CUBES. THE USE OF WATER REDUCING ADMIXTURES IN GROUT IS NOT ALLOWED.

5. PROVIDE VERTICAL REINFORCING IN GROUTED CELLS AS INDICATED. REINFORCING BARS SHALL CONFORM TO ASTM A615 GRADE 60. VERTICAL REINFORCING SHALL BE LAPPED 48 BAR DIAMETERS.

6. HORIZONTAL WALL REINFORCING SHALL BE DUR-O-WAL TRUSS DESIGN WITH 3/16"ø SIDE RODS AND 3/16"ø CROSS TIES. REINFORCING SHALL BE PLACED IN MASONRY WALLS AT 16" O.C., MAXIMUM. SPACE HORIZONTAL JOINT REINFORCEMENT AT 8" ON CENTER IN ALL PARAPETS. USE SHOP FABRICATED SPECIAL PIECES AT ALL CORNERS AND TEES.

7. CMU PLACED BELOW GRADE SHALL BE GROUTED SOLID.

8. CONCRETE MASONRY UNITS SHALL BE LAID IN RUNNING BOND UNLESS NOTED OTHERWISE ON THE ARCHITECTURAL DRAWINGS. BOND CORNERS AND INTERSECTIONS OF LOAD BEARING WALLS. ALL EXTERNAL CORNERS SHALL BE BULL NOSE BLOCKS.

9. ALL LOAD BEARING CMU WALLS SHALL CONTAIN JOINTS WHICH ARE FULLY BEDDED.

10. FILL ALL BOND BEAMS WITH 3000 PSI CONCRETE USING 3/8" MAXIMUM AGGREGATE SIZE.

11. PROVIDE TEMPORARY BRACING OF MASONRY WALLS TO WITHSTAND LATERAL LOADS DURING CONSTRUCTION.

12. MASONRY WALLS WHICH SUPPORT LINTELS FOR DOORS, WINDOWS, DUCT OPENINGS 3FT OR LARGER (NOT INCLUDING STEEL JOISTS OR BEAMS) SHALL HAVE MINIMUM 16" WIDE CELLS GROUTED SOLID FULL HEIGHT UNDER BEARING WITH 1-#5 BAR MINIMUM VERTICAL AND DOWEL TO MATCH.

13. BRICK VENEER ANCHORS FOR STUD BACKUP SHALL HAVE 3/16" ROUND HOT DIPPED GALVANIZED STEEL TIES FOR USE WITH DW-10 ANCHORS BY HOHMANN & BARNARD. LOCATE 16" O.C. VERTICALLY 32" O.C. HORIZONTALLY AND 8" O.C. AROUND OPENINGS. REINFORCEMENT FOR VENEER SHALL INCLUDE A MINIMUM OF ONE 3/16"Ø ROD IN THE VENEER CONNECTED TO ADJUSTABLE TIES. NOTE HEAVIER VENEERS MAY REQUIRE A SECOND ROD. DESIGN SHALL BE BASED ON HOHMANN AND BARNARD, INC. DW-10 SEISMICLIP INTERLOCK SYSTEM WITH BYNA-TIE MASONRY TIES.

14. SEE ARCHITECTURAL DRAWINGS FOR CONTROL JOINTS.

15. LOCATION OF LINTELS AT MASONRY OPENINGS SHALL BE COORDINATED WITH THE ARCHITECTURAL AND MECHANICAL DRAWINGS.

16. UNLESS OTHERWISE NOTED, PROVIDE THE FOLLOWING LINTELS FOR EACH 4 INCH THICKNESS OF MASONRY WALL WITH 8 INCHES OF BEARING AT EACH END. FOR UNEQUAL LEG ANGLES, ORIENT THE LONG LEGS VERTICAL: GALVANIZE ALL LINTELS EXPOSED TO THE WEATHER.
OPENINGS UP TO 4'------- L3 1/2x3 1/2x5/16
OPENINGS 4' TO 6'------- L4x3 1/2x5/16
OPENINGS 6' TO 8'------- L5x3 1/2x5/16

17. PROVIDE REBAR DOWELS FROM THE FOUNDATIONS TO MATCH VERTICAL REINFORCING SIZE AND SPACING. DOWELS SHALL HAVE STANDARD 90 DEGREE HOOKS AND LAP WITH THE FIRST LIFT OF REINFORCING. STANDARD LAP LENGTH OF GRADE 60 MASONRY REINFORCING BARS SHALL BE 48 BAR DIAMETERS.

18. PROVIDE STEEL JOIST AND BEAM BEARING PLATES AND OTHER ACCESSORIES AS INDICATED. PROVIDE 2 COURSES OF SOLIDLY GROUTED CMU BELOW ALL BEAM BEARINGS OVER A WIDTH OF 1'-4" CENTERED ON THE WALL OR BEARING POINT UNLESS OVER A BOND BEAM. SEE TYPICAL BEAM BEARING DETAIL FOR ADDITIONAL INFORMATION. PROVIDE PIERS PER PLAN AND PIER SCHEDULE.

19. CONCRETE MASONRY UNITS NOTED AS "IVANY" SHALL BE ONE- CORE, OPEN END UNITS WITH A COMPRESSIVE STRENGTH OF 3000 PSI ON THE NET AREA OF BLOCK, FURNISHED BY AN IVANY BLOCK FRANCHISE HOLDER. WALLS BUILT WITH IVANY BLOCK SHALL USE TYPE M MORTAR AND GROUT FILL SHALL BE A PEA GRAVEL MIX HAVING A 28 DAY COMPRESSIVE STRENGTH OF 3000 PSI. f'm = 2800 PSI. USE SPECIAL IVANY CORNER UNITS AT CORNERS.

20. BREAKAWAY FIRE ANCHORS SHALL BE ROLLED STRIP ZINC ALLOY IN 1/8" THICK BY HECKMANN BUILDING PRODUCTS INC., ANCHORS SHALL BE SUPPLIED AND INSTALLED BY THE GENERAL CONTRACTOR. GENERAL CONTRACTOR SHALL VERIFY ACTUAL SIZES, SHAPES AND NUMBER OF ANCHORS REQUIRED.

21. CONTROL JOINTS IN MASONRY WALLS SHALL BE PLACED @ 20'-0" MAXIMUM

## STEEL NOTES

1. STRUCTURAL STEEL FABRICATION, ERECTION, AND CONNECTION DESIGN SHALL CONFORM TO:

a. AISC "SPECIFICATION FOR STRUCTURAL STEEL BUILDINGS"
ANSI/AISC 360-10 OR (05)
(PART 16 OF AISC "STEEL CONSTRUCTION MANUAL")
b. AISC "STEEL CONSTRUCTION MANUAL", 13TH EDITION (14TH EDITION)
c. AISC "DETAILING FOR STEEL CONSTRUCTION", 3RD EDITION

2. ALL WELDING SHALL CONFORM TO:

a. "STRUCTURAL WELDING CODE - STEEL", AWS D1.1 - LATEST EDITION
b. "STRUCTURAL WELDING CODE - SHEET STEEL" AWS D1.3 - LATEST EDITION

2. ALL STEEL SHALL CONFORM TO THE FOLLOWING ASTM SPECS:

a. WIDE FLANGE SHAPES: ASTM A992, Fy = 50 KSI.
b. CHANNELS, ANGLES, PLATES & BARS: ASTM A36, Fy = 36 KSI
c. CHANNELS, ANGLES, PLATES & BARS: ASTM A572 GR. 50 (WHERE NOTED)
d. HOLLOW STRUCTURAL SECTIONS: ASTM A500 GR. B, Fy = 46 KSI
f. STEEL PIPES: ASTM A53, GR. B, Fy = 35 KSI
g. WELDING ELECTRODES: AWS A5.1 OR A5.5, E70XX
h. HEADED STUDS: AWS D1.1 TYPE "B", Fu = 65 KSI (MIN.)
i. ANCHOR RODS: ASTM F1554 GR 36, U.N.O.
ASTM F1554 GR. 55 (SECTION S1 WELDABILITY SUPPL.)
ASTM F1554 GR. 105 (WHERE NOTED)
j. HIGH STRENGTH BOLTS: ASTM A325, U.N.O., ASTM 490 (WHERE NOTED)

## LUMBER NOTES

1. CONTRACTOR SHALL SUBMIT CERTIFICATION FOR ALL LUMBER AND WOOD PRODUCTS USED ON THIS PROJECT. CERTIFICATION SHALL INDICATE COMPLIANCE WITH THE DESIGN PROPERTIES INDICATED IN THESE NOTES AND ON THE DRAWINGS.

2. ALL LUMBER AND WOOD CONSTRUCTION SHALL COMPLY WITH THE FOLLOWING CODES AND SPECIFICATIONS:

A. AMERICAN INSTITUTE OF TIMBER CONSTRUCTION: TIMBER CONSTRUCTION MANUAL
B. ANSI / AF&PA: NATIONAL DESIGN SPECIFICATIONS FOR WOOD CONSTRUCTION, LATEST APPLICABLE EDITION.
C. AMERICAN PLYWOOD ASSOCIATION: PLYWOOD DESIGN SPECIFICATIONS
D. AMERICAN WOOD-PRESERVERS ASSOCIATIONS STANDARDS.
F. NATIONAL LUMBER MANUFACTURERS ASSOCIATIONS: NATION DESIGN SPECIFICATION FOR STRESS-GRADE LUMBER AND ITS FASTENINGS.

3. ALL DIMENSIONAL LUMBER PROVIDED FOR THE PROJECT SHALL BE SURFACE DRY WITH A MAXIMUM MOISTURE CONTENT NOT EXCEEDING 19 PERCENT. GREEN LUMBER SHALL NOT BE UTILIZED FOR ANY PORTION OF THIS PROJECT!

4. ALL STRUCTURAL LUMBER SHALL BE DOUGLAS FIR-LARCH #2 (MINIMUM) STRESS GRADE LUMBER OR APPROVED EQUAL WITH THE FOLLOWING MINIMUM ALLOWABLE PROPERTIES:
Fb =900 psi Fv =180 psi E =1,600,000 psi

5. ALL STRUCTURAL LUMBER TO BE STAMPED IN ACCORDANCE WITH THE AMERICAN INSTITUTE OF TIMBER CONSTRUCTION'S "CONSTRUCTION MANUAL".

6. ALL TIMBERSTRAND (LSL) BOARDS SHALL BE AS ENGINEERED AND MANUFACTURED BY WEYERHAEUSER TRUS JOIST OR APPROVED EQUAL WITH THE FOLLOWING MINIMUM ALLOWABLE PROPERTIES:
Fb =1,700 psi Fv =425psi E =1,300,000 psi

7. ALL MICROLLAM (LVL) BEAMS SHALL BE AS ENGINEERED AND MANUFACTURED BY WEYERHAEUSER TRUS JOIST OR APPROVED EQUAL WITH THE FOLLOWING MINIMUM ALLOWABLE PROPERTIES:
Fb =2,600 psi Fv =285 psi E =2,000,000 psi

8. ALL PARALLAM (PSL) BEAMS TO BE AS ENGINEERED AND MANUFACTURED BY WEYERHAEUSER TRUS JOIST OR APPROVED EQUAL WITH THE FOLLOWING MINIMUM ALLOWABLE PROPERTIES:
Fb = 2,900 psi Fv = 290 psi E = 2,000,000 psi

9. ALL TIMBERSTRAND (LSL) JOISTS (USED AS REPETITIVE FLOOR OR ROOF MEMBERS) SHALL BE AS ENGINEERED AND MANUFACTURED BY WEYERHAEUSER TRUS JOIST OR APPROVED EQUAL WITH THE FOLLOWING MINIMUM ALLOWABLE PROPERTIES:
Fb =2,250 psi Fv = 300*psi E = 1,500,000 psi G = 93,750 psi

* - ACCOUNTS FOR LARGE HOLE CAPABILITIES.

10. ALL TIMBER AND TIMBER CONSTRUCTION SHALL COMPLY WITH SPECIFICATIONS AND CODES AS SPECIFIED BELOW: AMERICAN INSTITUTE OF TIMBER CONSTRUCTION: TIMBER CONSTRUCTION MANUAL. AMERICAN FOREST AND PAPER ASSOCIATION. NATIONAL DESIGN SPECIFICATION FOR WOOD CONSTRUCTION. AMERICAN PLYWOOD ASSOCIATION: PLYWOOD DESIGN SPECIFICATION. AMERICAN WOOD PRESERVERS ASSOCIATION STANDARDS.

11. ALL TIMBER CONNECTIONS ARE TO BE MADE USING PREFABRICATED CONNECTORS. CONNECTORS NOTED ON DRAWINGS ARE BASED ON "SIMPSON STRONG-TIE." INSTALL ALL SPECIFIED FASTENERS, IN ACCORDANCE WITH THE MANUFACTURER'S INSTRUCTIONS, BEFORE LOADING THE CONNECTION. TOE-NAILING WILL NOT BE PERMITTED. SUBSTITUTES SHALL BE SUBMITTED IN ACCORDANCE WITH THE GENERAL NOTES.

12. ALL WOOD CONNECTORS SHALL BE PROVIDED PER MANUFACTURER'S STANDARD FINISH EXCEPT FOR APPLICATIONS INVOLVING PRESSURE TREATED OR FIRE-RETARDANT TREATED LUMBER. FOR TREATED LUMBER APPLICATION, ALL METAL CONNECTORS SHALL BE H.D. GALVANIZED OR STAINLESS STEEL. FOR SIMPSON CONNECTORS FOR PRESSURE TREATED APPLICATIONS, "ZMAX", POST HOT DIPPED GALVANIZED OR STAINLESS STEEL SHALL BE USED. PLAIN CARBON STEEL FASTENERS ARE ALLOWED IN SBX/DOT AND ZINC BORATE PRESERVATIVE-TREATED WOOD IN AN INTERIOR DRY ENVIRONMENT ONLY.

13. ALL NAILS FOR THE PROJECT SHALL BE COMMON WIRE NAILS OR POWER DRIVEN NAILS IN CONFORMANCE WITH ICC-ES EVALUATION REPORT ESR-1539. SEE PLAN, DETAILS, AND SCHEDULES FOR NAILING REQUIREMENTS.

14. HEADERS AT NON-BEARING CONDITIONS SHALL BE A MINIMUM:
OPENING SIZE HEADER
SEE PLAN & SECTIONS

15. PROVIDE A MINIMUM OF ONE LINE OF BLOCKING/CROSS-BRIDGING FOR ALL SPANS. IN ADDITION, PROVIDE CONTINUOUS SOLID BLOCKING OR CROSS-BRIDGING LINES AT 8'-0" O.C. MAXIMUM SPACING, FOR ALL WOOD JOISTS/WOOD RAFTERS/ROOF TRUSSES/FLOOR TRUSSES/PROVIDE ADDITIONAL X-BRIDGING AS REQUIRED BY FABRICATOR. ALSO, PROVIDE SOLID BLOCKING AT ALL BEARING ENDS FOR JOIST, RAFTERS, ETC.

16. PROVIDE PRESSURE TREATED LUMBER WHERE LUMBER IS IN CONTACT WITH CONCRETE OR OUTSIDE OF BUILDING. PRESSURE TREATMENT TO BE ACQ. ALL NAILS OR SCREWS FASTENERS ANCHOR BOLTS TRUSS TIE DOWN PLATES, ETC. TO BE HOT DIPPED GALVANIZED, STAINLESS STEEL, TRIPLE ZINC COATED (Z-MAX) OR APPROVED EQUAL.

17. SHEATHING NAILS IN SHEAR WALLS AND EXTERIOR WALLS SHALL BE DRIVEN WITH THE HEAD OF THE NAIL FLUSH WITH THE SURFACE OF THE SHEATHING. DO NOT OVER-DRIVE NAILS.

18. HEAVY TIMBER DECKING TO BE TONGUE AND GROOVE TYPE, HEM-FIR COMMERCIAL GRADE OR BETTER, MEETING AITC STANDARD 112-93. DECKING TO BE INSTALLED WITH TONGUES UP. EACH PIECE TO BE ATTACHED TO SUPPORTS WITH 16d NAILS--ONE FACE-NAILED AND ONE TOE-NAILED THROUGH THE TONGUE.

19. ALL EXTERIOR WALLS AND INTERIOR BEARING WALLS SHALL BE FRAMED SO THAT ANY WALL CORNER OR END IS PACKED OUT WITH FULL HEIGHT SOLID STUDS. THIS INCLUDES ALL BENDS AND INTERSECTIONS BETWEEN EXTERIOR, DEMISING, OR LOAD BEARING WALLS SUCH AS 'L' 'T' OR 'Z' SHAPED PLAN CONFIGURATIONS.

20. ALL PRESSURE TREATED LUMBER SHALL BE SOUTHERN YELLOW PINE NO. 2 STRESS GRADING RULES SPIB.

21. PLYWOOD SUBFLOORING AND PLYWOOD ROOF SHEATHING SHALL BE: 3/4" INCH THICK STRUCTURAL 2 C-D INT-APA PLYWOOD WITH EXTERIOR GLUE OR 3/4" INCH THICK STURD-I-FLOOR INT-APA. EDGES SHALL BE TONGUE AND GROOVE. ALL JOINTS SHALL BE STAGGERED. NAILING SHALL COMPLY WITH APA REQUIREMENTS FOR PLYWOOD FLOOR/ROOF DIAPHRAGMS.

22. PROVIDE ADDITIONAL STUDS IN BEARING WALLS AT LOCATIONS OF BEAMS OR GIRDER TRUSS BEARINGS. ALL BUILT UP STUDS DIMENSIONS SHALL MATCH AT A MINIMUM, THE WIDTH OF THE BEAM OR GIRDER TRUSSES, UNLESS NOTED OTHERWISE ON THE DRAWINGS.

23. IN ALL BEARING WALL AND SHEAR WALLS WHERE THE WALL TOP OF BOTTOM PLATES HAVE BEEN COMPROMISED BY A CUT OR NOTCH TO ACCOMMODATE PLUMBING, HVAC DUCTWORK, ETC..., THE WOOD PLATES SHALL BE REPAIRED USING SIMPSON CTS218 COMPRESSION AND TENSION STRAPS. THESE STRAPS SHALL BE PROVIDED ON ALL DAMAGED PLATES, ON BOTH SIDES OF THE PLATES. ATTACHMENT SHALL BE PER THE MINIMUM REQUIREMENTS OF THE MANUFACTURER.

24. ALL STRUCTURAL LIGHT FRAMED WOOD STUD WALLS SHALL HAVE 2x BLOCKING AT 48" O.C.

## SPECIAL INSPECTION ITEMS REQUIRED

| SPECIAL INSPECTIONS | CODE/SECTION |
|---|---|
| STRUCTURAL STEEL DETAILS<br>STRUCTURAL STEEL HIGH STRENGTH BOLTS | IBC 1705.2<br>IBC 1705.2 |
| MASONRY | IBC 1705.4 |
| STRUCTURAL STABILITY - EXISTING BUILDINGS | IBC 1704.20 |
| CONCRETE-CAST IN PLACE | IBC 1705.3 |
| SUBSURFACE CONDITIONS: | IBC 1705.6 |
| SUBGRADE INSPECTION | IBC 1705.6 |
| SUBSURFACE CONDITIONS-FILL PLACEMENT & IN-PLACE DENSITY | IBC 1705.6<br>IBC 1705.6 |
| SUBSURFACE INVESTIGATIONS (BORINGS/TEST PITS) | IBC 1704.7.4 |
| EXCAVATIONS-SHEETING, SHORING AND BRACING | IBC 1705.6 |
| POST INSTALLED ANCHORS | IBC 1705.3 |
| FOOTING & FOUNDATIONS | IBC 1705.3 |
| STRUCTURAL WOOD FRAME | IBC 1704.2.5<br>IBC 1705.5 |

## DRAWING LIST

| DWG # | TITLE |
|---|---|
| S1 | NOTES & DRAWING LIST |
| S2 | FOUNDATION PLAN |
| S3 | 1st FLOOR PLAN |
| S4 | ATTIC PLAN |
| S5 | ROOF FRAMING PLANS |
| S6 | SECTIONS & DETAILS |
| S7 | SECTIONS & DETAILS |
| S8 | TYPICAL SECTIONS & DETAILS |
| S9 | TYPICAL SECTIONS & DETAILS |
| S10 | TYPICAL SECTIONS & DETAILS |
| S11 | TYPICAL SECTIONS & DETAILS |
| S12 | TYPICAL SECTIONS & DETAILS |

## ABBREVIATIONS

| | | | |
|---|---|---|---|
| AB | ANCHOR BOLT | INFO | INFORMATION |
| ABT | ABOUT | INS | INSIDE |
| ADTL | ADDITIONAL | IF | INSIDE FACE |
| ALT | ALTERNATE | INTER | INTERSECTION |
| B.PLT | BASE PLATE | JT | JOINT |
| B/B.PLT | BOTTOM OF BASE PLATE | KB | KNEE BRACE |
| BS | BOTH SIDES | LLO | LONG LEG OUTSTANDING |
| BCD | BOLT CIRCLE DIAMETER | LLV | LONG LEG VERTICAL |
| BC | BOLTED CONNECTION | MC | MOMENT CONNECTION |
| BOT | BOTTOM | NOM | NOMINAL |
| BRCG | BRACING | NS | NEAR SIDE |
| CHKD PLT | CHECKERED PLATE | NTS | NOT TO SCALE |
| CONST | CONSTRUCTION | OPNG | OPENING |
| CONT | CONTINUOUS | OS | OUTSIDE FACE |
| CONTR | CONTRACTOR | PLCS | PLACES |
| COL | COLUMN | PLTF | PLATFORM |
| CONC | CONCRETE | PROJ | PROJECTION |
| CJ | CONTROL JOINT | PLT | PLATE |
| DIA | DIAMETER | RAD | RADIUS |
| DIAG | DIAGONAL | REF | REFERENCE |
| DIM | DIMENSION | REM | REMOVABLE |
| DISCH | DISCHARGE | REINF | REINFORCING |
| DN | DOWN | REQD | REQUIRED |
| DWG | DRAWING | SCH | SCHEDULE |
| EA | EACH | SPCG | SPACING |
| EF | EACH FACE | SQ | SQUARE |
| ES | EACH SIDE | SS | STAINLESS STEEL |
| EW | EACH WAY | STD | STANDARD |
| EL | ELEVATION | SPT | SUPPORT |
| EXIST | EXISTING | SYM | SYMMETRICAL |
| EQ | EQUAL | SH | SHEET |
| FAB | FABRICATE | THK | THICK |
| FS | FAR SIDE | T.PLT | TOE PLATE |
| FLG | FLANGE | T/C | TOP OF CONC |
| FTG | FOOTING | T/P | TOP OF PLATE |
| FDN | FOUNDATION | T/S | TOP OF STEEL |
| GA | GAGE | T/W | TOP OF WALL |
| GALV | GALVANIZED | T&B | TOP & BOTTOM |
| GR | GRADE | UON | UNLESS OTHERWISE NOTED |
| GRTG | GRATING | VERT | VERTICAL |
| HR | HAND RAIL | WC | WELDED CONNECTION |
| HORIZ | HORIZONTAL | | |

# BYRAM MUNICIPAL BUILDING
# ADMINISTRATIVE/CIVIL
## LOCATED AT 10 MANSFIELD DRIVE
## BLOCK 365 - LOT 16.01
## BOROUGH OF BYRAM
## SUSSEX COUNTY, NEW JERSEY

NADER
house of design
THE NADER GROUP, LLC
Architects, Engineers & Surveyors
111 Mill Street
Hackettstown, NJ 07840
p. 908.850.3500 | f. 908.441.5803
e. wassim.nader@thenadergroup.com
www.naderhouseofdesign.com
CERTIFICATE OF AUTHORIZATION
Engineering & Survey
No. 24GA28213500
Architecture
No. 21AC00126800

CONSTRUCTION DOCUMENTS

RAJ EKHALIKAR
N.J. PROFESSIONAL ENGINEER
NO 36498

STRUCTURAL ENGINEER:
**EXL Structural Consultants LLC**
1 Blue Hill Plaza, Suite 1501, 1st Floor
Pearl River, NY 10695
Tel: (201) 561-4911
Email: ekhalikar. raj@gmail.com

| NO. | DATE | REVISION | CHK |
|---|---|---|---|
| 00 | 08/01/23 | BID SET | RE |

DRAWN BY: RM
SCALE: 1/4"=1'-0"
DATE: 03.29.2022
JOB NO. XXXX

**NOTES, ANCHOR BOLTS & DRAWINGS LIST**

DRAWING NO.
**S1**

PLOT DATE: 2023-08-03

© 2023 NADER GROUP-ASA, NADER HOUSE OF DESIGN

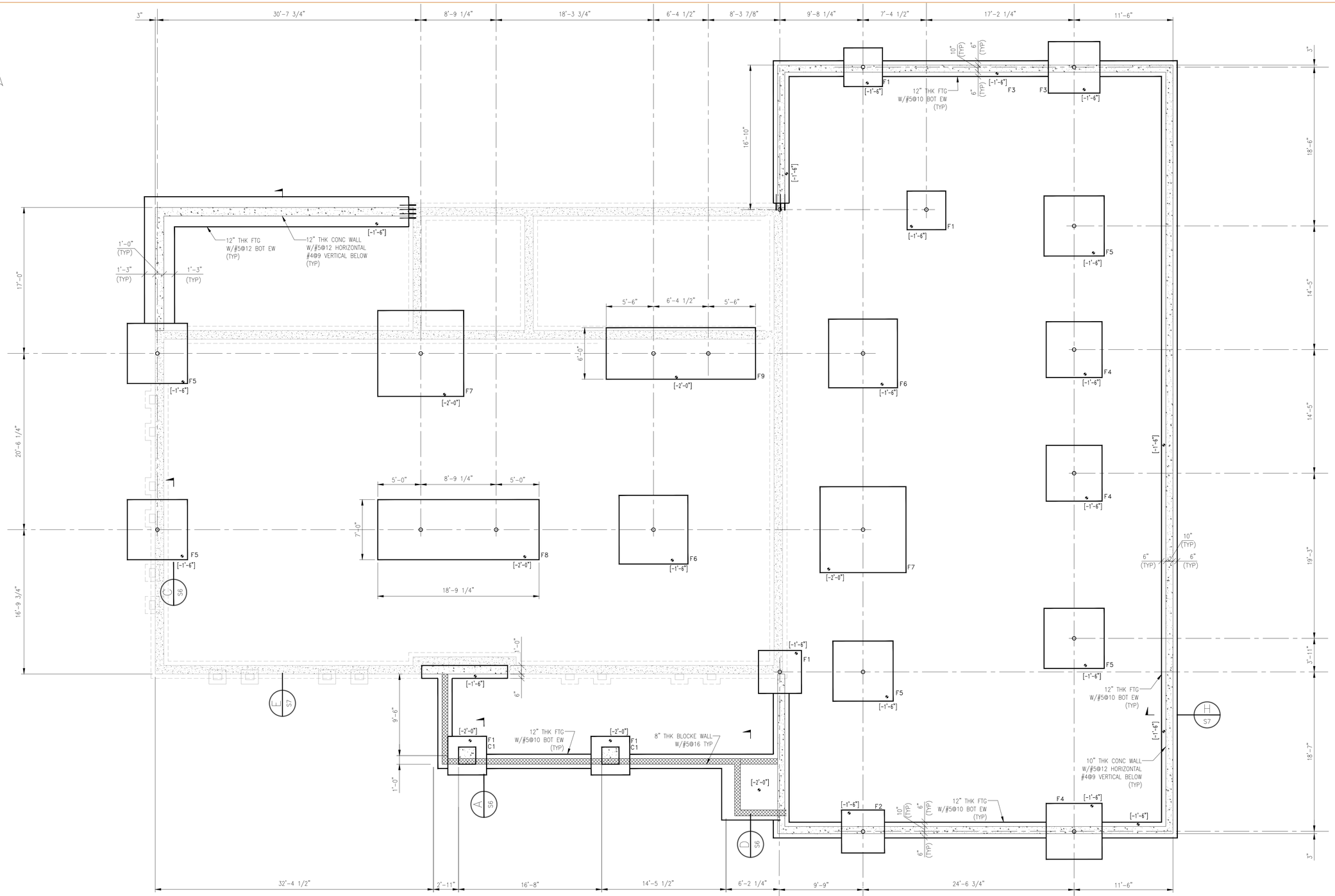


FOUNDATION PLAN

(SCALE: 3/16"=1'-0")

| FOOTING TABLE | | | | | |
|---|---|---|---|---|---|
| SL NO. | FOOTING NO. | FOOTING SIZE | | | REINFORCEMENT |
| | | L | B | T | |
| 1.) | F1 | 4'-6" | 4'-6" | 12" | #6@8 BOT (BOTH WAYS) |
| 2.) | F2 | 5'-0" | 5'-0" | 12" | #6@8 BOT (BOTH WAYS) |
| 3.) | F3 | 6'-0" | 6'-0" | 16" | #6@8 BOT (BOTH WAYS) |
| 4.) | F4 | 6'-6" | 6'-6" | 12" | #6@8 BOT (BOTH WAYS) |
| 5.) | F5 | 7'-0" | 7'-0" | 12" | #6@8 BOT (BOTH WAYS) |
| 6.) | F6 | 8'-0" | 8'-0" | 12" | #6@8 BOT (BOTH WAYS) |
| 7.) | F7 | 10'-0" | 10'-0" | 18" | #6@8 BOT (BOTH WAYS) |
| 8.) | F8 | 18'-9 1/4" | 7'-0" | 18" | #6@8 TOP&BOT (BOTH WAYS) |
| 9.) | F9 | 17'-4 1/2" | 6'-0" | 12" | #6@8 TOP&BOT (BOTH WAYS) |

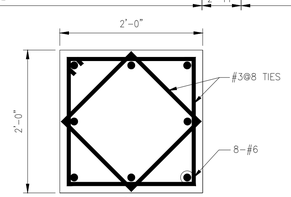


C1

(24"x24")

CONCRETE COLUMN

(SCALE 1"=1'-0")

NOTES:

1. FOR GENERAL NOTES SEE DWG S1

LEGEND:

1. DENOTES CONC
2. DENOTES EXISTING
3. DENOTES NEW

GRAPHIC SCALE: 3/16" = 1'-0"

0' 1' 3' 5' 6' 8' 10' 12' 14' 16' 18' 20'

PLOT DATE: 2023-08-03

# BYRAM MUNICIPAL BUILDING ADMINISTRATIVE/CIVIL

LOCATED AT 10 MANSFIELD DRIVE
BLOCK 365 - LOT 16.01
BOROUGH OF BYRAM
SUSSEX COUNTY, NEW JERSEY


NADER house.design

THE NADER GROUP, LLC
Architects, Engineers & Surveyors

111 Mill Street
Hackettstown, NJ 07840

p. 908.850.3500 | f. 908.441.5803
e. wassim.nader@thenadergroup.com

www.naderhouseofdesign.com

CERTIFICATE OF AUTHORIZATION
Engineering & Survey
No. 24GA28213500
Architecture
No. 21AC00126800


CONSTRUCTION DOCUMENTS


RAJ EKHALIKAR

STATE OF NEW JERSEY
RAJ EKHALIKAR
No. 36498
LICENSED PROFESSIONAL ENGINEER

N.J. PROFESSIONAL ENGINEER
NO 36498

STRUCTURAL ENGINEER:
EXL Structural Consultants LLC
1 Blue Hill Plaza, Suite 1501, 1st Floor
Pearl River, NY 10695
Tel: (201) 561-4911
Email: ekhalikar. raj@gmail.com


| NO. | DATE | REVISION | CHK |
|---|---|---|---|
| 00 | 08/01/23 | BID SET | RE |

DRAWN BY: RM

SCALE: 3/16"=1'-0"

DATE: 03.29.2022

JOB NO. XXXX

FOUNDATION PLAN

DRAWING NO.

S2

© 2023 NADER GROUP ASA, NADER HOUSE OF DESIGN

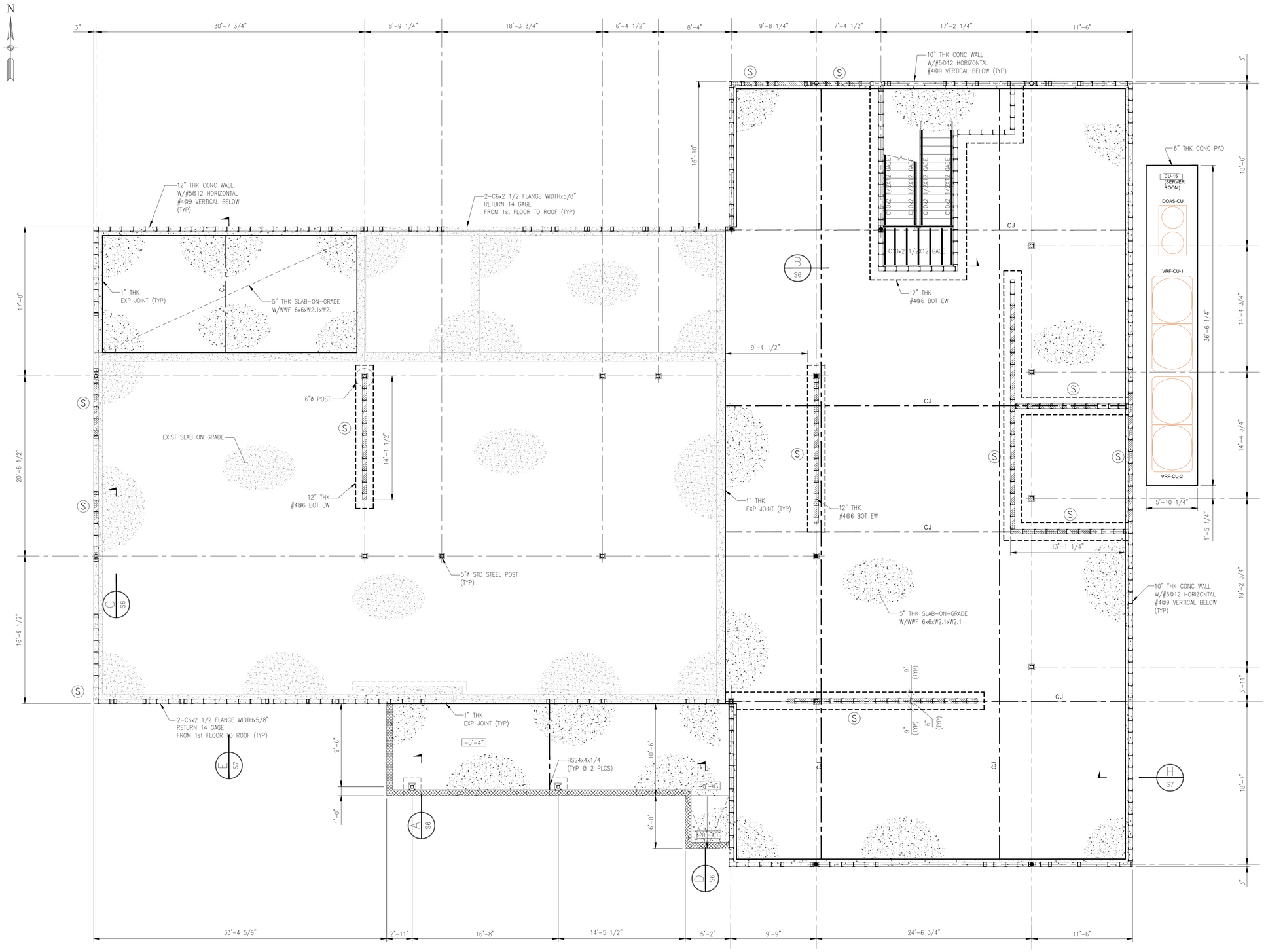


## 1st FLOOR PLAN

(T/1st FLOOR EL 0'-0")

(SCALE: 3/16"=1'-0")

NOTES:

1. FOR GENERAL NOTES SEE DWG S1

LEGEND:

1. DENOTES CONC
2. DENOTES PLYWOOD
3. DENOTES WOOD STUD WALL
4. DENOTES EXISTING
5. DENOTES NEW
6. DENOTES 6x6 LVL POST

GRAPHIC SCALE: 3/16" = 1'-0"

0' 1' 3' 5' 6' 8' 10' 12' 14' 16' 18' 20'

# BYRAM MUNICIPAL BUILDING ADMINISTRATIVE/CIVIL

LOCATED AT 10 MANSFIELD DRIVE
BLOCK 365 - LOT 16.01
BOROUGH OF BYRAM
SUSSEX COUNTY, NEW JERSEY


NADER house + design

THE NADER GROUP, LLC
Architects, Engineers & Surveyors
111 Mill Street
Hackettstown, NJ 07840

p. 908.850.3500 | f. 908.441.5803
e. wassim.nader@thenadergroup.com

www.naderhouseofdesign.com


CERTIFICATE OF AUTHORIZATION
Engineering & Survey
No. 24GA28213500
Architecture
No. 21AC00126800

CONSTRUCTION DOCUMENTS


RAJ EKHALIKAR

STATE OF NEW JERSEY
RAJ EKHALIKAR
No. 36498
PROFESSIONAL ENGINEER

N.J. PROFESSIONAL ENGINEER
NO 36498

STRUCTURAL ENGINEER:
**EXL Structural Consultants LLC**
1 Blue Hill Plaza, Suite 1501, 1st Floor
Pearl River, NY 10695
Tel: (201) 561-4911
Email: ekhalikar. raj@gmail.com


| NO. | DATE | REVISION | CHK |
|---|---|---|---|
| 00 | 08/01/23 | BID SET | RE |

DRAWN BY: RM
SCALE: 3/16"=1'-0"
DATE: 03.29.2022
JOB NO. XXXX

## 1st FLOOR PLAN

DRAWING NO.
S3


ALL RIGHTS ARE RESERVED. IT IS VIOLATION TO ALTER, REPRODUCE OR USE OF ANY PARTS OF THE CONTENTS WITHOUT THE EXPRESS WRITTEN PERMISSION OF THE A&D ASSOCIATES, INC.

© 2023 NADER GROUP ASSA, NADER HOUSE OF DESIGN


PLOT DATE: 2023-08-03

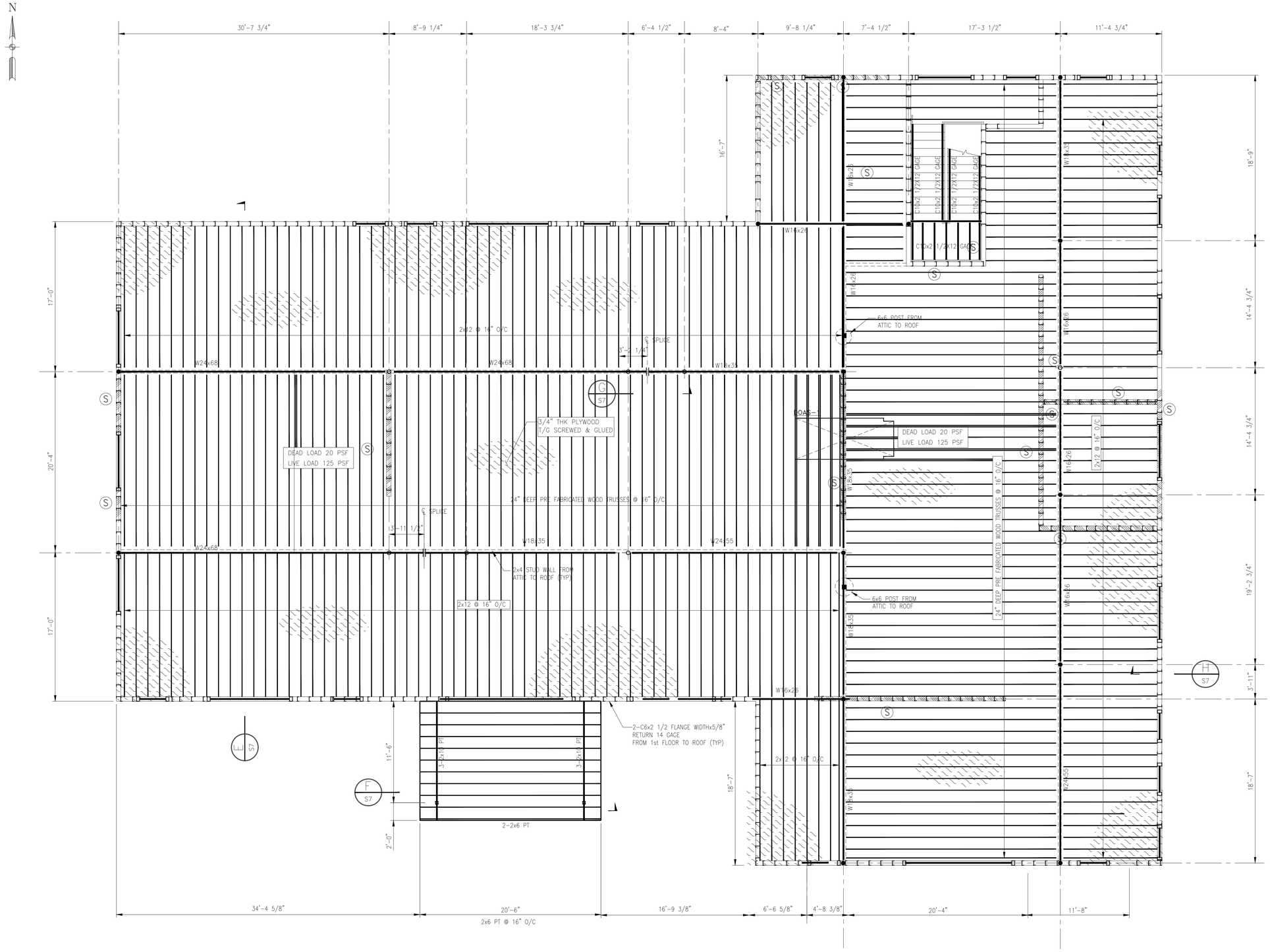


## ATTIC PLAN

(T/ATTIC FLOOR EL 14'-0")
(SCALE: 3/16"=1'-0")

## ATTIC LOAD SCHEDULE

| | |
|---|---|
| DEAD LOAD | |
| TOTAL DEAD LOAD | 25 PSF |
| LIVE LOAD | |
| LIVE LOAD | 125 PSF |

## NOTES:

1. FOR GENERAL NOTES SEE DWG S1

## LEGEND:

1. DENOTES PLYWOOD
2. DENOTES WOOD STUD WALL
3. DENOTES EXISTING
4. DENOTES NEW
5. DENOTES 6x6 LVL POST

GRAPHIC SCALE: 3/16" = 1'-0"
0' 1' 3' 5' 6' 8' 10' 12' 14' 16' 18' 20'

# BYRAM MUNICIPAL BUILDING ADMINISTRATIVE/CIVIL

LOCATED AT 10 MANSFIELD DRIVE
BLOCK 365 - LOT 16.01
BOROUGH OF BYRAM
SUSSEX COUNTY, NEW JERSEY


NADER house of design
THE NADER GROUP, LLC
Architects, Engineers & Surveyors
111 Mill Street
Hackettstown, NJ 07840
p. 908.850.3500 | f. 908.441.5803
e. wassim.nader@thenadergroup.com
www.naderhouseofdesign.com
CERTIFICATE OF AUTHORIZATION
Engineering & Survey
No. 24GA28213500
Architecture
No. 21AC00126800


CONSTRUCTION DOCUMENTS


RAJ EKHALIKAR
N.J. PROFESSIONAL ENGINEER
NO 36498

STRUCTURAL ENGINEER:
EXL Structural Consultants LLC
1 Blue Hill Plaza, Suite 1501, 1st Floor
Pearl River, NY 10695
Tel: (201) 561-4911
Email: ekhalikar. raj@gmail.com


| NO. | DATE | REVISION | CHK |
|---|---|---|---|
| 00 | 08/01/23 | BID SET | RE |

DRAWN BY: RM
SCALE: 3/16"=1'-0"
DATE: 03.29.2022
JOB NO. XXXX

## ATTIC PLAN

DRAWING NO.
S4

© 2023 NADER GROUP-NSA, NADER HOUSE OF DESIGN

PLOT DATE: 2023-08-03

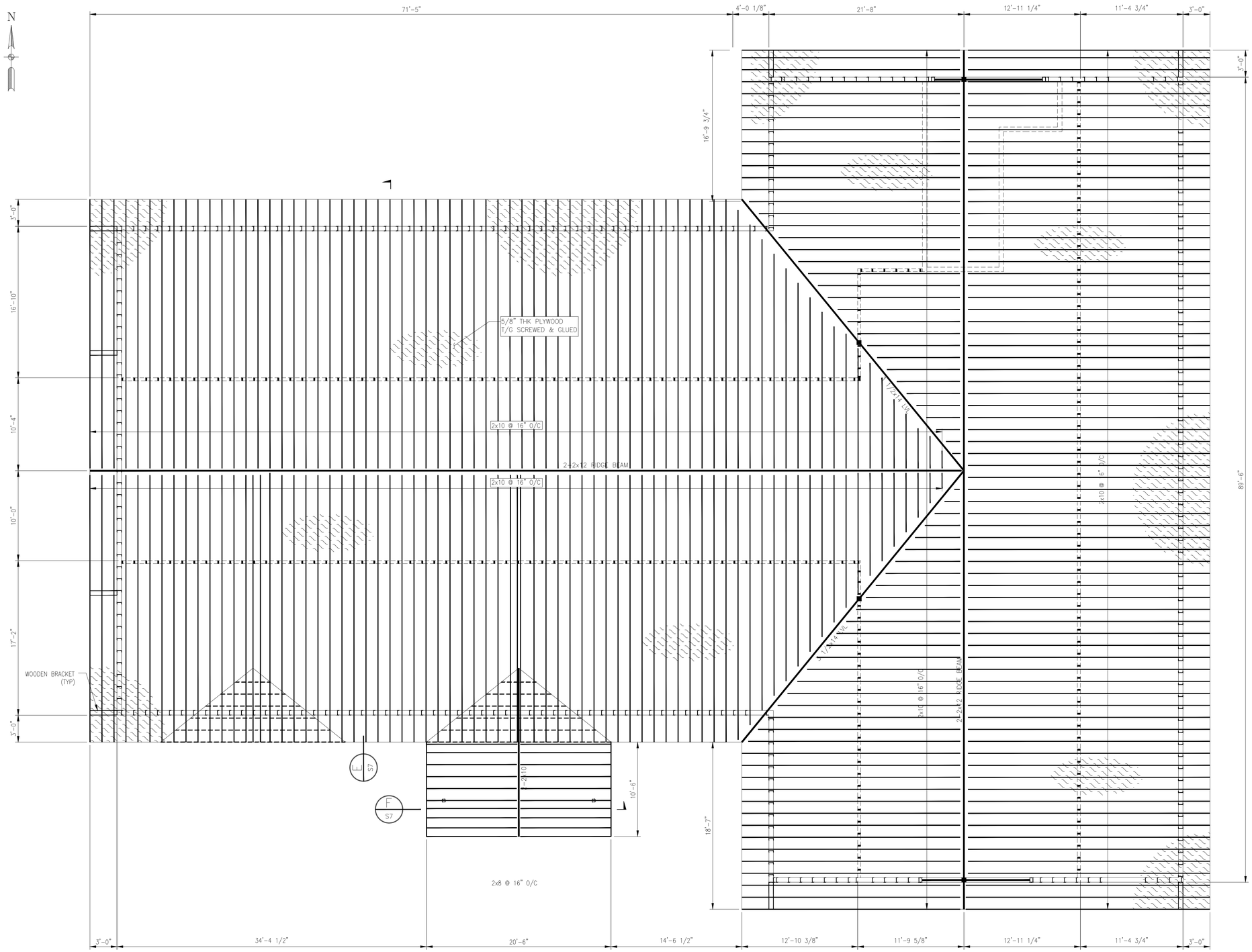


## ROOF FLOOR PLAN

(T/RIDGE EL 29'-8")
(SCALE: 3/16"=1'-0")

## ROOF LOAD SCHEDULE

| | |
|---|---|
| DEAD LOAD | |
| TOTAL DEAD LOAD | 20 PSF |
| LIVE LOAD | |
| LIVE LOAD | 30 PSF |

## NOTES:

1. FOR GENERAL NOTES SEE DWG S1

## LEGEND:

1. DENOTES PLYWOOD
2. DENOTES WOOD STUD WALL
3. DENOTES EXISTING
4. DENOTES NEW
5. DENOTES 6x6 LVL POST

GRAPHIC SCALE: 3/16" = 1'-0"
0' 1' 3' 5' 6' 8' 10' 12' 14' 16' 18' 20'

# BYRAM MUNICIPAL BUILDING ADMINISTRATIVE/CIVIL

LOCATED AT 10 MANSFIELD DRIVE
BLOCK 365 - LOT 16.01
BOROUGH OF BYRAM
SUSSEX COUNTY, NEW JERSEY


NADER house+design
THE NADER GROUP, LLC
Architects, Engineers & Surveyors
111 Mill Street
Hackettstown, NJ 07840
p. 908.850.3500 | f. 908.441.5803
e. wassim.nader@thenadergroup.com
www.naderhouseofdesign.com
CERTIFICATE OF AUTHORIZATION
Engineering & Survey
No. 24GA28213500
Architecture
No. 21AC00126800


CONSTRUCTION DOCUMENTS


RAJ EKHALIKAR
N.J. PROFESSIONAL ENGINEER
NO 36498

**STRUCTURAL ENGINEER:**
**EXL Structural Consultants LLC**
**1 Blue Hill Plaza, Suite 1501, 1st Floor**
**Pearl River, NY 10965**
**Tel: (201) 561-4911**
**Email: ekhalikar. raj@gmail.com**


| NO. | DATE | REVISION | CHK |
|---|---|---|---|
| 00 | 08/01/23 | BID SET | RE |

**DRAWN BY: RM**
**SCALE: 3/16"=1'-0"**
**DATE: 03.29.2022**
**JOB NO. XXXX**

## ROOF FRAMING PLAN

DRAWING NO.
**S5**

© 2023 NADER GROUP-ASA, NADER HOUSE OF DESIGN

PLOT DATE: 2023-08-03

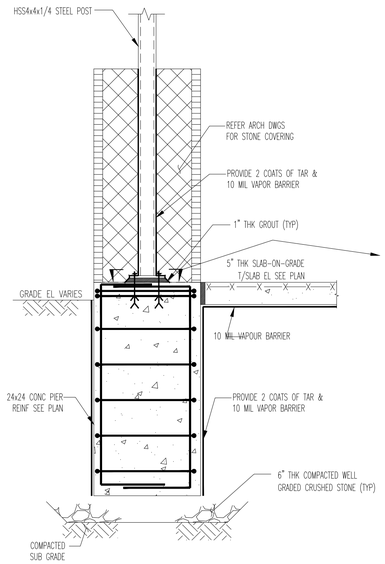


SECTION A S6
(SCALE: 3/4"=1'-0") (S2&S3)

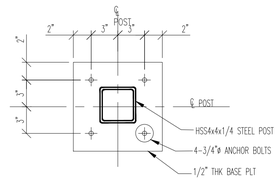


BASE PLATE DETAIL
(SCALE: 1 1/2"=1'-0")

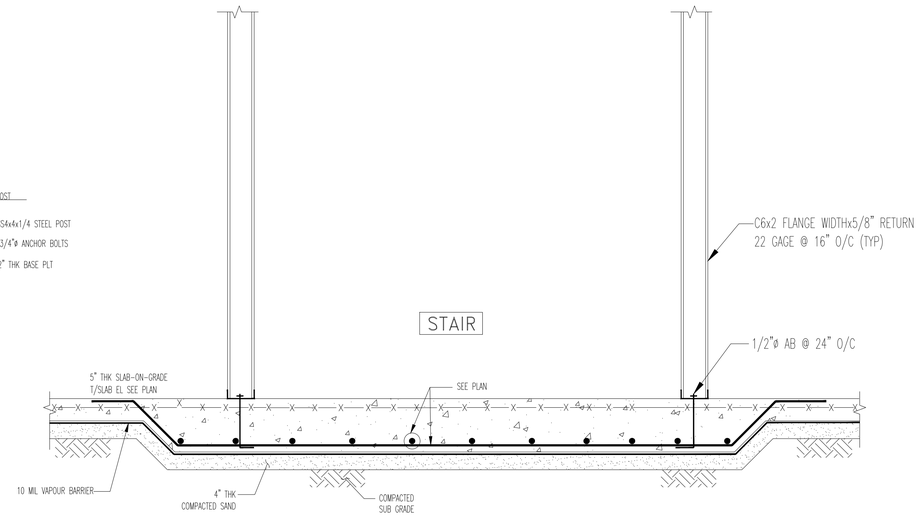


SECTION B S6
(SCALE: 3/4"=1'-0") (S3)

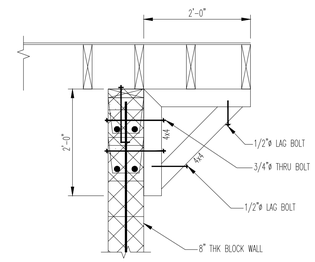


TYPICAL BRACKET DETAIL
(SCALE:3/4"=1'-0")

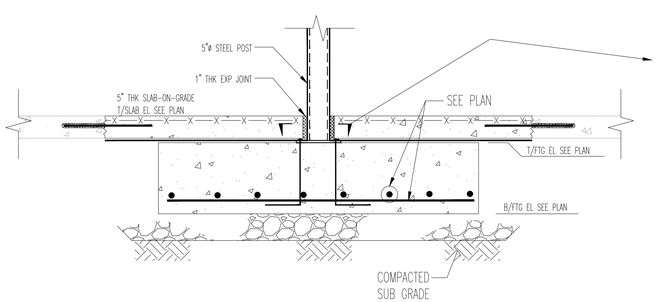


SECTION C S6
(SCALE: 3/4"=1'-0") (S2&S3)

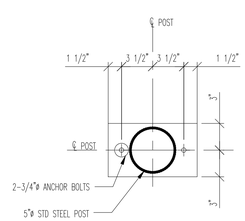


BASE PLATE DETAIL
(SCALE: 1 1/2"=1'-0")

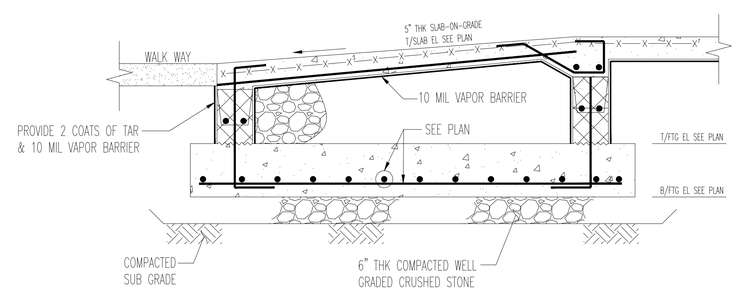


SECTION D S6
(SCALE: 3/4"=1'-0") (S2&S3)

LEGEND:
1. DENOTES BLOCK WALL
2. DENOTES CONC
3. DENOTES PLYWOOD

GRAPHIC SCALE: 3/4" = 1'-0"
0' 1' 2' 3' 4' 5'

# BYRAM MUNICIPAL BUILDING ADMINISTRATIVE/CIVIL

## LOCATED AT 10 MANSFIELD DRIVE
## BLOCK 365 - LOT 16.01
## BOROUGH OF BYRAM
## SUSSEX COUNTY, NEW JERSEY


NADER house.design
THE NADER GROUP, LLC
Architects, Engineers & Surveyors
111 Mill Street
Hackettstown, NJ 07840
p. 908.850.3500 | f. 908.441.5803
e. wassim.nader@thenadergroup.com
www.naderhouseofdesign.com
CERTIFICATE OF AUTHORIZATION
Engineering & Survey
No. 24GA28213500
Architecture
No. 21AC00126800


CONSTRUCTION DOCUMENTS


RAJ EKHALIKAR
N.J. PROFESSIONAL ENGINEER
NO 36498

**STRUCTURAL ENGINEER:**
**EXL Structural Consultants LLC**
1 Blue Hill Plaza, Suite 1501, 1st Floor
Pearl River, NY 10695
Tel: (201) 561-4911
Email: ekhalikar. raj@gmail.com


| NO. | DATE | REVISION | CHK |
|---|---|---|---|
| 00 | 08/01/23 | BID SET | RE |

DRAWN BY: RM
SCALE: 3/4"=1'-0"
DATE: 03.29.2022
JOB NO. XXXX

## SECTIONS & DETAILS

DRAWING NO.
**S6**

PLOT DATE: 2023-08-03

© 2023 NADER GROUP-ASA, NADER HOUSE OF DESIGN

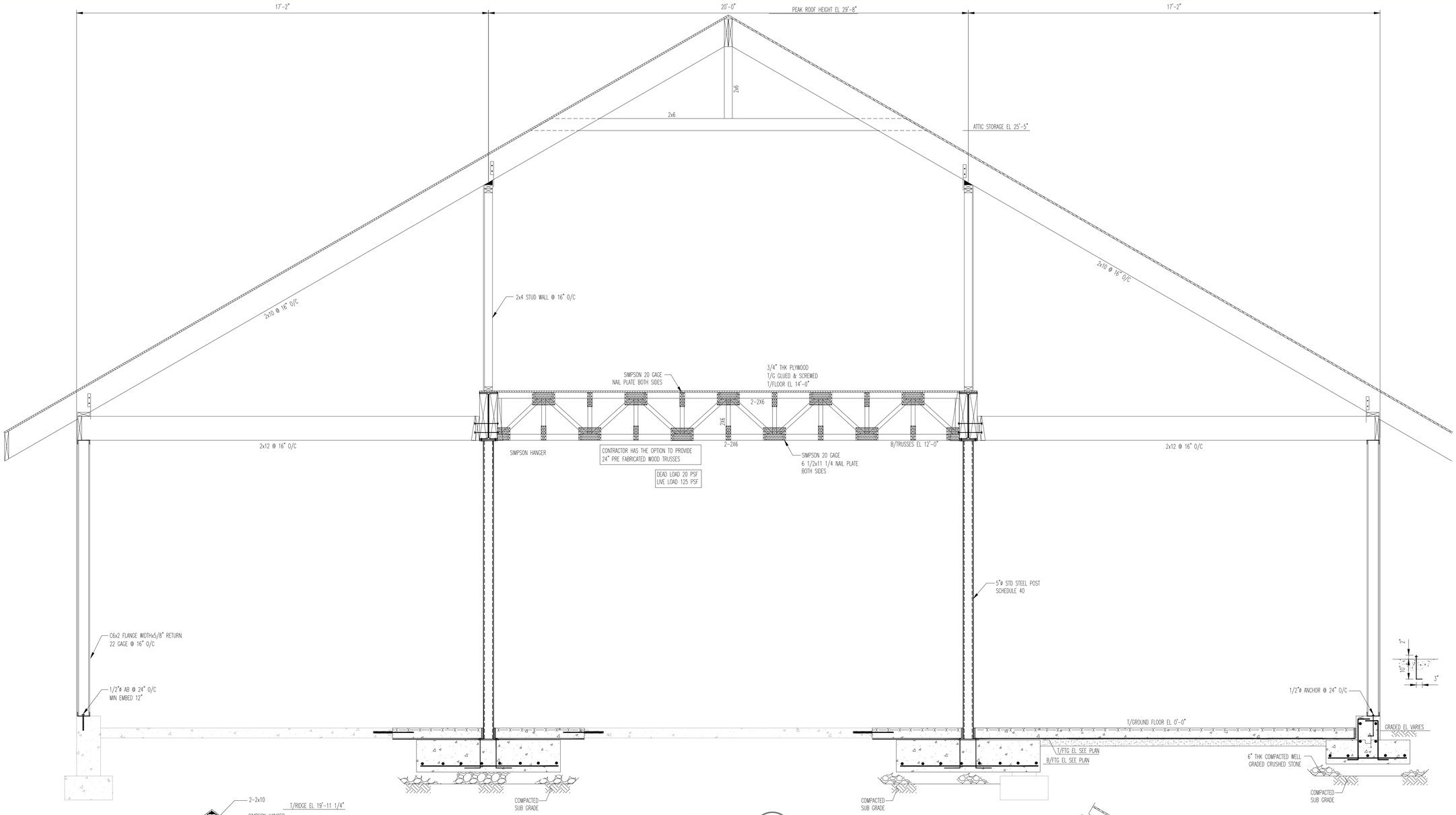


SECTION E S7
(SCALE: 1/2"=1'-0") (S2-S5)

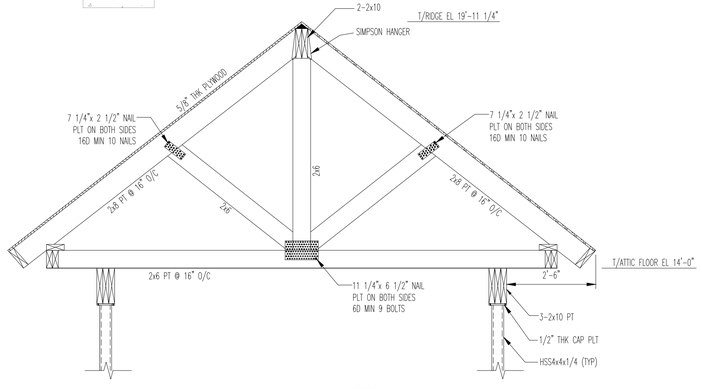


SECTION F S7
(SCALE: 1/2"=1'-0") (S4&S5)

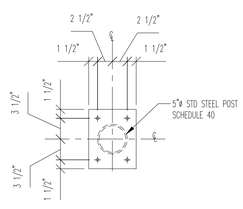


CAP PLATE DETAIL
SCALE (1"=1'-0")

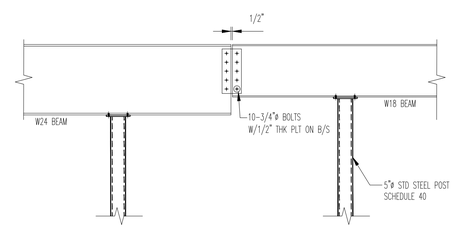


SECTION G S7
(SCALE: 1/2"=1'-0") (S4)

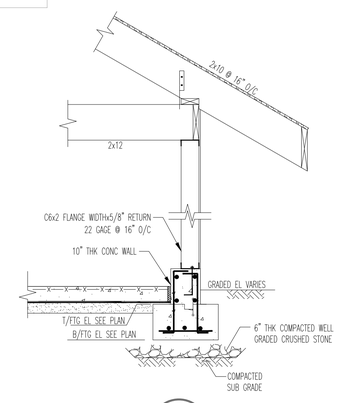


SECTION H S7
(SCALE: 1/2"=1'-0") (S2-S4)

LEGEND:

1. DENOTES BLOCK WALL
2. DENOTES CONC
3. DENOTES PLYWOOD

GRAPHIC SCALE: 1/2" = 1'-0"
6" 0' 1' 2' 4' 7'

# BYRAM MUNICIPAL BUILDING ADMINISTRATIVE/CIVIL

## LOCATED AT 10 MANSFIELD DRIVE
## BLOCK 365 - LOT 16.01
## BOROUGH OF BYRAM
## SUSSEX COUNTY, NEW JERSEY


NADER house.design

THE NADER GROUP, LLC
Architects, Engineers & Surveyors

111 Mill Street
Hackettstown, NJ 07840

p. 908.850.3500 | f. 908.441.5803
e. wassim.nader@thenadergroup.com

www.naderhouseofdesign.com

CERTIFICATE OF AUTHORIZATION
Engineering & Survey
No. 24GA28213500
Architecture
No. 21AC00126800


CONSTRUCTION DOCUMENTS


RAJ EKHALIKAR

STATE OF NEW JERSEY
RAJ EKHALIKAR
No. 36498
PROFESSIONAL ENGINEER

N.J. PROFESSIONAL ENGINEER
ND 36498

STRUCTURAL ENGINEER:
**EXL Structural Consultants LLC**
1 Blue Hill Plaza, Suite 1501, 1st Floor
Pearl River, NY 10695
Tel: (201) 561-4911
Email: ekhalikar. raj@gmail.com


| NO. | DATE | REVISION | CHK |
|---|---|---|---|
| 00 | 08/01/23 | BID SET | RE |

DRAWN BY: RM
SCALE: 1/2"=1'-0"
DATE: 03.29.2022
JOB NO. XXXX

## SECTIONS & DETAILS

DRAWING NO.
**S7**

PLOT DATE: 2023-08-03

© 2023 NADER GROUP-ASA, NADER HOUSE OF DESIGN

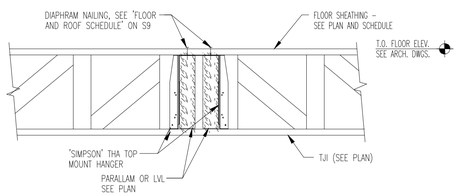


WOOD TRUSSES TO BEAM CONNECTION DETAIL

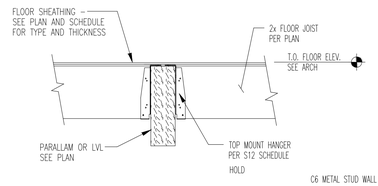


2x JOIST TO BEAM CONNECTION DETAIL

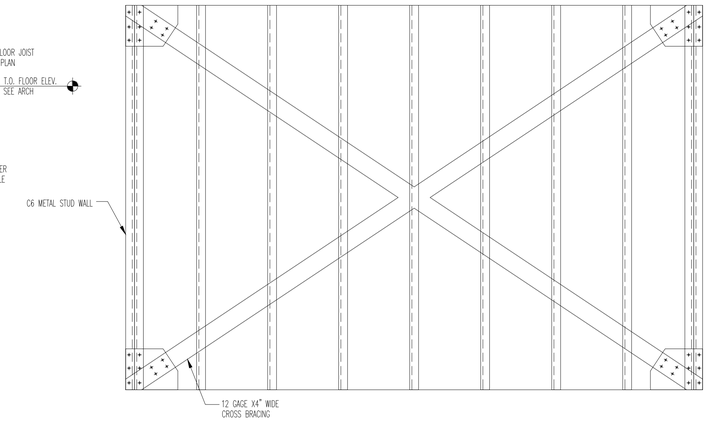


SHEAR WALL CROSS BRACING DETAIL

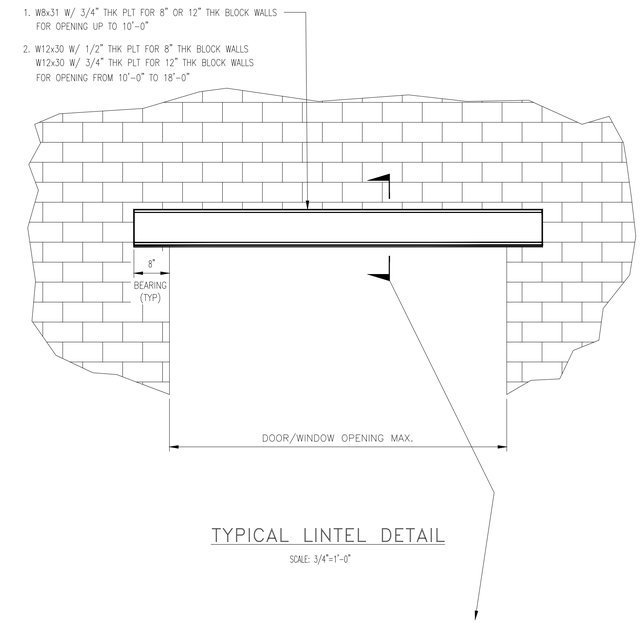


TYPICAL LINTEL DETAIL

SCALE: 3/4"=1'-0"

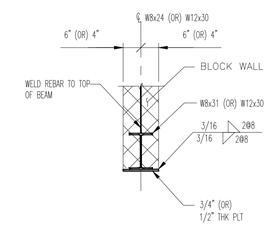


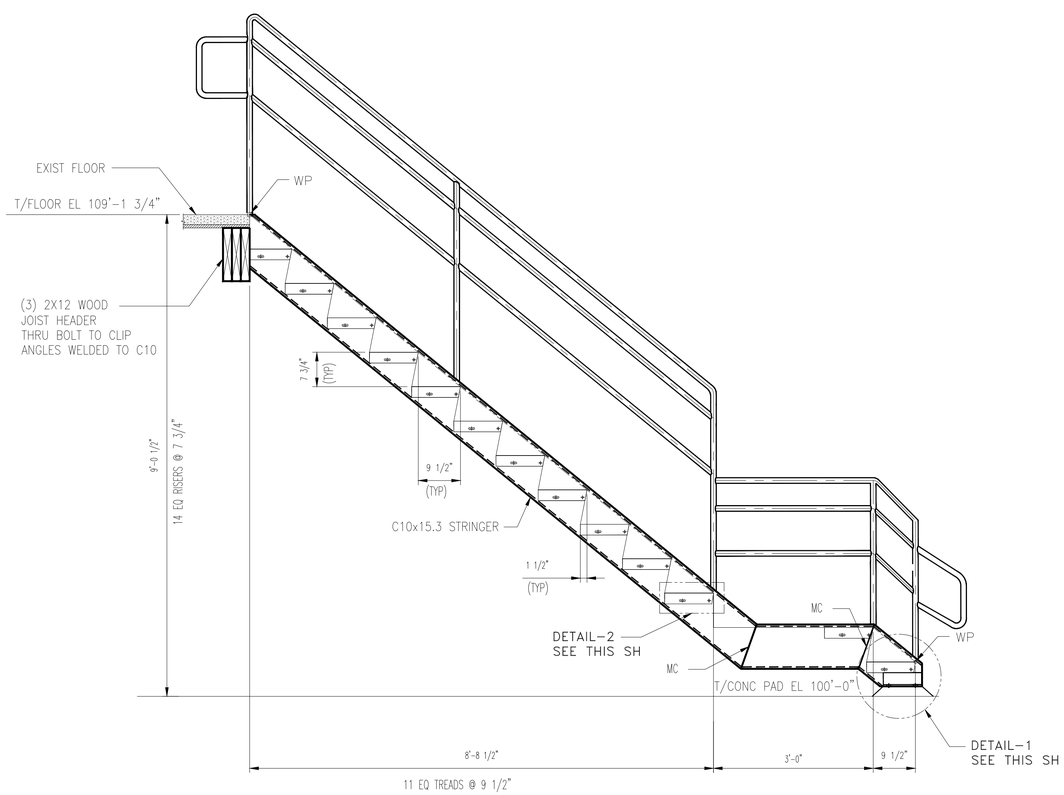


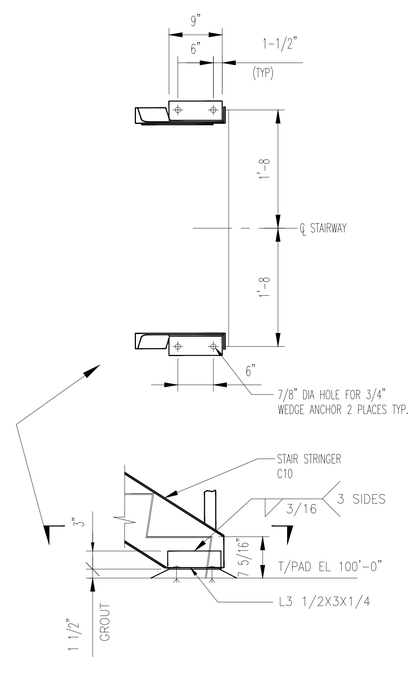


SECTION 1 S-103

(SCALE: 1"=1'-0") (S-103)

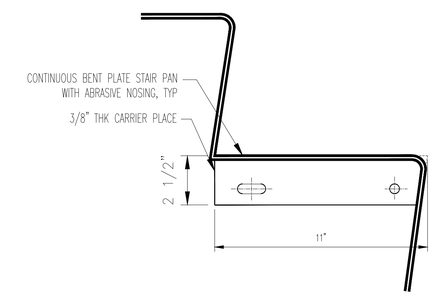


SECTION 2 S-103

(SCALE: 3"=1'-0") (S-103)

## NOTES:

1. FOR GENERAL NOTES SEE DWG S1

GRAPHIC SCALE: 3/4" = 1'-0"

0' 1' 2' 3' 4' 5'

# BYRAM MUNICIPAL BUILDING ADMINISTRATIVE/CIVIL

LOCATED AT 10 MANSFIELD DRIVE
BLOCK 365 - LOT 16.01
BOROUGH OF BYRAM
SUSSEX COUNTY, NEW JERSEY


NADER house.design

THE NADER GROUP, LLC
Architects, Engineers & Surveyors
111 Mill Street
Hackettstown, NJ 07840

p. 908.850.3500 | f. 908.441.5803
e. wassim.nader@thenadergroup.com

www.naderhouseofdesign.com

CERTIFICATE OF AUTHORIZATION
Engineering & Survey
No. 24GA28213500
Architecture
No. 21AC00126800


CONSTRUCTION DOCUMENTS

RAJ EKHALIKAR

N.J. PROFESSIONAL ENGINEER
NO 36498


STRUCTURAL ENGINEER:
**EXL Structural Consultants LLC**
1 Blue Hill Plaza, Suite 1501, 1st Floor
Pearl River, NY 10695
Tel: (201) 561-4911
Email: ekhalikar. raj@gmail.com


| NO. | DATE | REVISION | CHK |
|---|---|---|---|
| 00 | 08/01/23 | BID SET | RE |

DRAWN BY: RM
SCALE: 3/4"=1'-0"
DATE: 03.29.2022
JOB NO. XXXX

**TYPICAL SECTIONS & DETAILS**

DRAWING NO. **S8**

PLOT DATE: 2023-08-03

© 2023 NADER GROUP-ASA, NADER HOUSE OF DESIGN

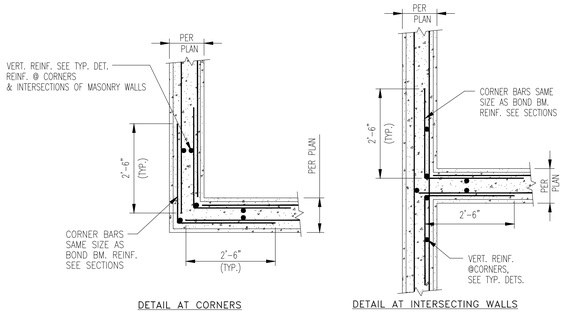


## TYPICAL BOND BEAM REINFORCEMENT DETAIL

(SCALE: 1/2"=1'-0")

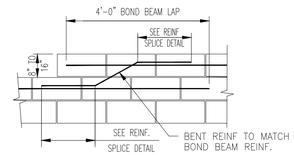


## TYPICAL BOND BEAM STEP DETAIL

(SCALE: 1/2"=1'-0")

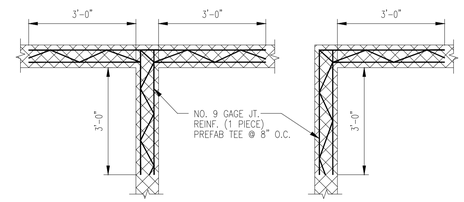


## TYPICAL MASONRY CORNERS

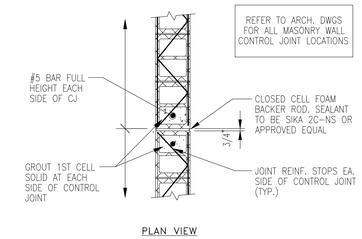


## TYPICAL CMU CONTROL JOINT DETAIL

(SCALE: 1/2"=1'-0")

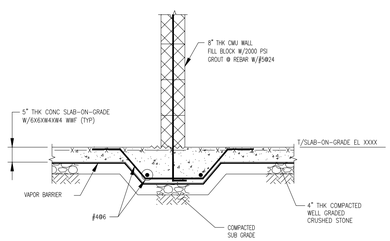


## TYPICAL THICKENED SLAB DETAIL UNDER WALLS

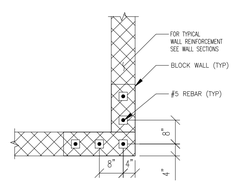


## TYPICAL CORNER BLOCK WALL DETAIL

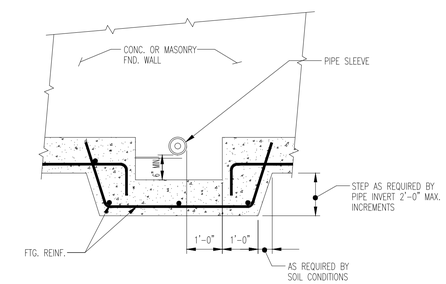


NOTE:
1. CONFIRM PLUMBING & ELECTRICAL DRAWINGS FOR SIZE, LOCATION AND INVERT ELEVATION OF PIPE OR CONDUITS.
2. SLEEVES FOR PLUMBING OR CONDUIT LINES: LENGTH = FTG. WIDTH. & DIAMETER = 2" GREATER THAN PIPE OD.
3. COORDINATE INVERT ELEVATION WITH THE MEP CONTRACTOR.

## TYPICAL STEP FOOTING AT PIPE OR CONDUIT CROSSING

(SCALE: 1/2"=1'-0")

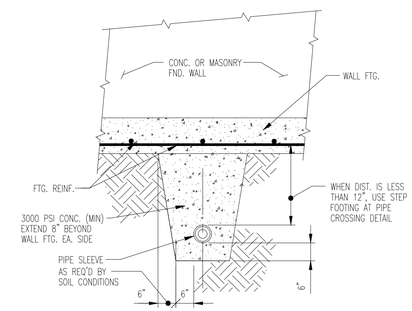


NOTE:
1. CONFIRM PLUMBING DWG. FOR SIZE, LOCATION & INV. ELEV OF PIPE.
2. PIPE SLEEVE FOR PLUMBING LINES: LENGTH = FTG. WIDTH & DIAMETER = 2" GREATER THAN PIPE OD.

## TYPICAL PIPE CROSSING BELOW WALL FOOTING

(SCALE: 1/2"=1'-0")

### TYPICAL NAILING SCHEDULE

| FRAMING CONDITION | TYPE | COMMON NAILS |
|---|---|---|
| JOIST TO SILL | TOE NAIL | 4-8d |
| BRIDGING TO JOIST | TOE NAIL | 2-8d |
| SOLE PLATE TO JOIST OR BLOCKING | FACE NAIL | 16d @ 16" c/c |
| TOP PLATE TO STUD | END NAIL | 2-16d |
| STUD TO SOLE PLATE | TOE NAIL | 4-8d |
| BUILT-UP STUDS | FACE NAIL | 16d @ 16" c/c |
| DOUBLE TOP PLATES | FACE NAIL | (2)16d @ 16" c/c |
| TOP PLATES LAPS & INTERSECTS | TOE NAIL | 2-16d |
| BUILT-UP HEADERS & BEAMS | FACE NAIL | (2)20d @ 16" c/c |
| ROOF RAFTER TO PLATE | ------ | FRAMING ANCHOR |
| ROOF TRUSS TO PLATE | ------ | FRAMING ANCHOR |
| PLYWOOD SHEATHING TO STUDS & RIM BAND | @ EDGES | 8d @ 6" c/c |
| | INTERMEDIATE | 8d @ 12" c/c |
| PLYWOOD FLOOR DECK TO JOISTS | @ EDGES | 8d @ 6" c/c |
| | INTERMEDIATE | 8d @ 10" c/c |
| PLYWOOD FLOOR DECK TO RAFTERS | @ EDGES | 8d @ 6" c/c |
| | INTERMEDIATE | 8d @ 12" c/c |

NOTE:
NAILINGS LISTED ABOVE ARE MINIMUMS UNLESS NOTED OTHERWISE ON DRAWINGS
NAIL SIZE - WHERE INDICATED IN SCHEDULE AND ON DRAWINGS.

### TYPICAL HANGERS SCHEDULE

MINIMUM REQUIRED HANGER UNLESS NOTED OTHERWISE - SIMPSON

| BEAM SIZE | TOP HANGER | FACE HANGER |
|---|---|---|
| 2x8 SAWN | LB28 | LUS28 |
| 2x10 SAWN | LB210A2 | LUS210 |
| 2x12 SAWN | LB212A2 | LUS210 |
| (2) 2x10 SAWN | HUS210-2TF | LUS28-2 |
| (2) 2x12 SAWN | HUS212-2TF | LUS210-2 |
| (3) 2x12 SAWN | HU212-3TF | LUS21-3 |
| TJI110 | ITS1.81/1.88 | IUS1.81/11.88 |
| TJI210 | ITS2.06/1.88 | IUS2.06/11.88 |
| TJI230, 360 | ITS2.37/1.88 | IUS2.37/11.88 |
| TJI560 | ITS3.56/1.88 | IUS3.56/11.88 |
| 1 3/4 x 11 7/8 LVL | ITS1.81/1.88 | HU11 |
| DBL 1 3/4 x 11 7/8 LVL | ITS3.56/1.88 | HU412 |
| 3 1/2 x 9 1/2 | HB3.56/9.5 | HU410 |
| 3 1/2 x 11 1/4 | HB3.56/11.25 | HU412 |
| 3 1/2 x 11 7/8 | HB3.56/11.88 | HU412 |
| 5 1/4 x 9 1/2 | HB5.50/9.5 | HU410 |
| 5 1/4 x 11 1/4 | HB5.50/11.25 | HU412 |
| 5 1/4 x 11 7/8 | HB5.50/11.88 | HU612 |
| 7 x 11 7/8 | HB7.12/11.88 | HU412-2 |
| 7 x 16 | HB7.12/16 | HU414-2 |

NOTES:
1. SEE ARCHITECTURAL WALL ASSEMBLIES FOR LOCATION OF SHEATHING IN SHEAR WALLS TYP.
2. INSTALL PANELS EITHER HORIZONTALLY OR VERTICALLY.
3. BLOCKING IS REQUIRED AT ALL PANEL EDGES
4. UNLESS NOTED OTHERWISE, THE SHEARWALL DESIGNATION APPLIES TO THE FULL EXTENT OF THE WALL BETWEEN CORNERS OF WALLS.
5. PROVIDE SHEAR WALL SHEATHING AND NAILING FOR THE ENTIRE LENGTH OF THE WALLS INDICATED ON THE PLANS. ENDS OF FULL HEIGHT WALLS ARE DESIGNATED BY WINDOWS, OR DOORWAYS OR AS DESIGNATED ON PLANS. HOLD-DOWN REQUIREMENTS PER PLANS.
6. SHEATHING EDGE NAILING IS REQUIRED AT ALL HOLD-DOWN POSTS. EDGE NAILING MAY ALSO BE REQUIRED TO EACH STUD USED IN BUILT-UP HOLD-DOWN POSTS. ADDITIONAL INFORMATION PER HOLD-DOWN DETAILS.
7. INTERMEDIATE FRAMING TO BE 2x MINIMUM MEMBERS.
8. FRAMING CLIPS SIMPSON STRONG-TIE A35 OR LTP5 OR APPROVED EQUIVALENT.
9. WHERE BOTTOM PLATE ATTACHMENT SPECIFIES (2) ROWS OF NAILS, STAGGER NAILS IN ROWS 1 1/2" APART MINIMUM.
10. PROVIDE HOT DIPPED GALVANIZED (ELECTRO-PLATING IS NOT ACCEPTABLE) NAILS AND CONNECTOR PLATES (FRAMING ANGLES, ETC.) FOR ALL CONNECTORS IN CONTACT WITH PRESSURE TREATED FRAMING MEMBERS.
11. WHERE WOOD SHEATHING IS APPLIED OVER GYPSUM SHEATHING, CONTACT THE ENGINEER OF RECORD FOR ALTERNATE NAILING REQUIREMENTS.
12. AT ADJOINING PANEL EDGES, (2) 2x STUDS NAILED TOGETHER MAYBE USED IN PLACE OF SINGE 3x STUD. DOUBLE 2x STUDS SHALL BE CONNECTED TOGETHER BY NAILING THE STUDS TOGETHER WITH 3" LONG NAILS OF THE SAME SPACING AND DIAMETER AS THE PATE NAILING PER "DETAIL A" THIS SHEET.
13. MINIMUM PANEL BLOCKING SHALL BE A 2x (MATCH DEPTH OF WALL STUDS) PLACED FLAT AND CENTERED ON THE JOINT WHERE REQUIRED. SHEATHING DIMENSION SHALL BE 24" AT BOUNDARIES AND CHANGES IN FRAMING UNLESS ALL EDGES ARE BLOCKED.
14. MIN. 1/2" GYPSUM BOARD AT INTERIOR SURFACE OF THE WALL W/ 5d NAILS AT 7" O.C. MIN. REQUIRED FOR ALL SHEAR WALLS.
15. WOOD SHEATHING TO BE APA RTD STRUCTURAL 1 UNLESS NOTED OTHERWISE.
16. SHEARWALLS SHALL RUN CONTINUOUS THROUGH BREAKS CAUSED BY INTERSECTING WALLS.
17. NAILS SHALL BE COMMON, FROM AN APPROVED MANUFACTURER ONLY WITH A MINIMUM NAIL PENETRATION OF 1 1/2" INTO FRAMING. FIELD NAILING SHALL BE SPACED AT 12" O.C. U.N.O.

### FLOOR & ROOF SCHEDULE

| MARK | FLOOR TYPE |
|---|---|
| S1 | 3/4" THICK STRUCTURAL 2 C.D INT-APA PLYWOOD WITH EXTERIOR GLUE AND NAILED. FULLY BLOCKED AT EDGES AND SECURED WITH 8d NAILS AT 6" O.C. AT PLYWOOD EDGES: 12" O.C. IN FIELD |
| S2 | 5/8" THICK APA RATED T&G SHEATHING WITH FACE GRAIN PERPENDICULAR TO SUPPORTS. BLOCKED AT EDGES AND SECURED WITH 8d NAILS AT: 6" O.C. AT PLYWOOD EDGES: 12" IN FIELD |

## NOTES:

1. FOR GENERAL NOTES SEE DWG S1

## LEGEND:

1. DENOTES CONCRETE WALL
2. DENOTES BLOCK WALL

GRAPHIC SCALE: 3/4" = 1'-0"
0' 1' 2' 3' 4' 5'

GRAPHIC SCALE: 1/2" = 1'-0"
6" 0' 1' 2' 4' 7'

# BYRAM MUNICIPAL BUILDING ADMINISTRATIVE/CIVIL

LOCATED AT 10 MANSFIELD DRIVE
BLOCK 365 - LOT 16.01
BOROUGH OF BYRAM
SUSSEX COUNTY, NEW JERSEY

NADER house+design
THE NADER GROUP, LLC
Architects, Engineers & Surveyors
111 Mill Street
Hackettstown, NJ 07840
p. 908.850.3500 | f. 908.441.5803
e. wassim.nader@thenadergroup.com
www.naderhouseofdesign.com
CERTIFICATE OF AUTHORIZATION
Engineering & Survey
No. 24GA28213500
Architecture
No. 21AC00126800

CONSTRUCTION DOCUMENTS

RAJ EKHALIKAR
N.J. PROFESSIONAL ENGINEER
NO 36498

STRUCTURAL ENGINEER:
EXL Structural Consultants LLC
1 Blue Hill Plaza, Suite 1501, 1st Floor
Pearl River, NY 10695
Tel: (201) 561-4911
Email: ekhalikar. raj@gmail.com

| NO. | DATE | REVISION | CHK |
|---|---|---|---|
| 00 | 08/01/23 | BID SET | RE |

DRAWN BY: RM
SCALE: 1/2"=1'-0"
DATE: 03.29.2022
JOB NO. XXXX

## TYPICAL SECTIONS & DETAILS

DRAWING NO.
S9

© 2023 NADER GROUP-ASA, NADER HOUSE OF DESIGN

PLOT DATE: 2023-08-03

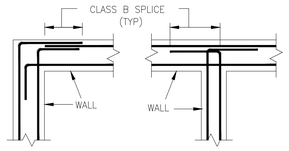


PLAN AT CORNER PLAN AT INTERSECTION

TYPICAL
CORNER REINFORCING

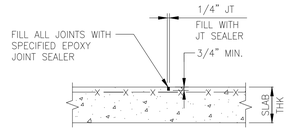


SAW-JOINTS SHALL BE CUT IMMEDIATELY AFTER SLAB RECEIVES THE FINAL STEEL TROWEL FINISH WITH A "SOF-CUT" SAW MANUFACTURED BY CHIUMINATTA CONCRETE CONCEPTS. ALL CUTTING RESIDUE SHALL BE REMOVED IMMEDIATELY FROM TOP OF CONCRETE SLAB. SEE PLANS FOR LOCATIONS.

TYPICAL CONTROL JOINTS FOR
SLAB-ON-GRADE

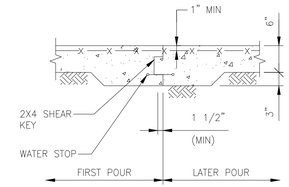


TYPICAL CONSTRUCTION JOINT FOR
SLAB-ON-GRADE

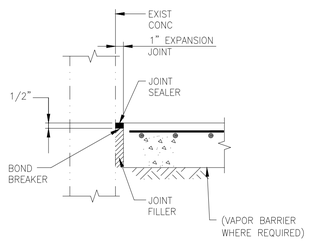


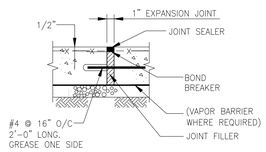


TYPICAL
EXPANSION JOINTS

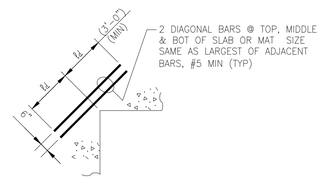


TYPICAL RE-ENTRANT
CORNER REINFORCING IN MAT & SLAB

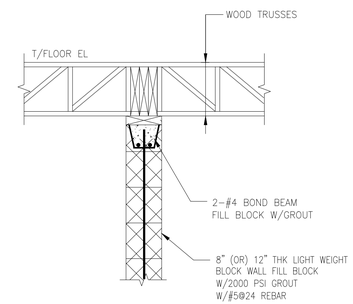


TYPICAL SEISMIC RESTRAINT
FOR BLOCK WALL
(FOR NON-LOAD BEARING WALL)
(SCALE: 3/4"=1'-0")

REINFORCING BAR SPLICES
PER ACI 318
f'c = 4,000 psi fy = 60,000 psi

| BAR SIZE | CLASS "B" SPLICE | | COMPRESSION SPLICE |
|---|---|---|---|
| | TOP BARS | OTHER BARS | |
| #3 (10) | 2'-0" | 1'-6" | 1'-0" |
| #4 (13) | 2'-8" | 2'-1" | 1'-3" |
| #5 (16) | 3'-4" | 2'-7" | 1'-7" |
| #6 (19) | 4'-0" | 3'-1" | 1'-11" |
| #7 (22) | 5'-10" | 4'-6" | 2'-2" |
| #8 (25) | 6'-8" | 5'-2" | 2'-6" |
| #9 (29) | 7'-6" | 5'-10" | 2'-10" |
| #10 (32) | 8'-6" | 6'-6" | 3'-2" |
| #11 (36) | 9'-5" | 7'-3" | 3'-6" |

TABULATED VALUES ARE FOR UNCOATED BARS AND NORMAL WEIGHT CONCRETE. TOP BARS ARE HORIZONTAL REINFORCEMENT PLACED SUCH THAT MORE THAN 12" OF CONCRETE IS PLACED BELOW THE BAR.

TABULATED VALUES ARE FOR BARS WHICH HAVE AT LEAST ONE BAR DIAMETER OF CLEAR CONCRETE COVER AND ARE SPACED AT LEAST TWO BAR DIAMETERS; OR HAVE AT LEAST ONE BAR DIAMETER OF CLEAR CONCRETE COVER, ARE SPACED AT LEAST ONE ONE BAR DIAMETER AND ARE ENCLOSED BY STIRRUPS OR TIES. SPLICE LENGHTS FOR BARS NOT CONFORMING TO EITHER OF THESE CONDITIONS SHALL BE INCREASED 50%%%.

REINFORCING BAR SPLICES

(f'c = 4,000 psi & fy = 60,000 psi)

REINFORCING BAR DEVELOPMENT
PER ACI 318
f'c = 4,000 psi fy = 60,000 psi

| BAR SIZE | BASIC TENSION DEVELOPMENT | TOP BAR DEVELOPMENT | COMPRESSION DEVELOPMENT | STANDARD HOOK DEVELOPMENT |
|---|---|---|---|---|
| #3 (10) | 1'-2" | 1'-6" | 8" | 7" |
| #4 (13) | 1'-7" | 2'-1" | 9" | 9" |
| #5 (16) | 2'-0" | 2'-7" | 1'-0" | 1'-0" |
| #6 (19) | 2'-4" | 3'-1" | 1'-2" | 1'-2" |
| #7 (22) | 3'-6" | 4'-6" | 1'-5" | 1'-5" |
| #8 (25) | 3'-11" | 5'-2" | 1'-7" | 1'-7" |
| #9 (29) | 4'-6" | 5'-10" | 1'-9" | 1'-9" |
| #10 (32) | 5'-0" | 6'-6" | 2'-0" | 2'-0" |
| #11 (36) | 5'-7" | 7'-3" | 2'-3" | 2'-3" |

TABULATED VALUES ARE FOR UNCOATED BARS AND NORMAL WEIGHT CONCRETE.

TOP BARS ARE HORIZONTAL REINFORCEMENT PLACED SUCH THAT MORE THAN 12" OF CONCRETE IS PLACED BELOW THE BAR.

TABULATED VALUES ARE FOR BARS WHICH HAVE AT LEAST ONE BAR DIAMETER OF CLEAR CONCRETE COVER AND ARE SPACED AT LEAST TWO BAR DIAMETERS; OR HAVE AT LEAST ONE BAR DIAMETER OF CLEAR CONCRETE COVER, ARE SPACED AT LEAST ONE ONE BAR DIAMETER AND ARE ENCLOSED BY STIRRUPS OR TIES. SPLICE LENGTHS FOR BARS NOT CONFORMING TO EITHER OF THESE CONDITIONS SHALL BE INCREASED 50%.

REINFORCING BAR DEVELOPMENT
TABLE 3

(f'c = 4,000 psi & fy = 60,000 psi)

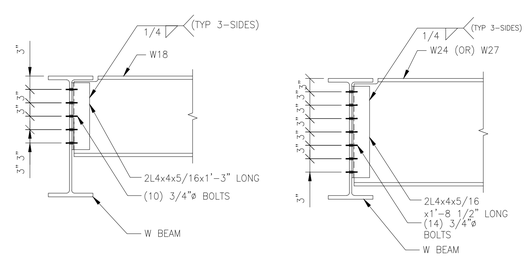


TYPICAL BEAM TO BEAM CONNECTION

NOTES:

1. FOR GENERAL NOTES SEE DWG S1

LEGEND:

1. DENOTES BLOCK WALL
2. DENOTES CONC

GRAPHIC SCALE: 3/4" = 1'-0"
0' 1' 2' 3' 4' 5'

# BYRAM MUNICIPAL BUILDING ADMINISTRATIVE/CIVIL

LOCATED AT 10 MANSFIELD DRIVE
BLOCK 365 - LOT 16.01
BOROUGH OF BYRAM
SUSSEX COUNTY, NEW JERSEY


NADER house.design
THE NADER GROUP, LLC
Architects, Engineers & Surveyors
111 Mill Street
Hackettstown, NJ 07840
p. 908.850.3500 | f. 908.441.5803
e. wassim.nader@thenadergroup.com
www.naderhouseofdesign.com
CERTIFICATE OF AUTHORIZATION
Engineering & Survey
No. 24GA28213500
Architecture
No. 21AC00126800


CONSTRUCTION DOCUMENTS


RAJ EKHALIKAR
N.J. PROFESSIONAL ENGINEER
ND 36498
STRUCTURAL ENGINEER:
EXL Structural Consultants LLC
1 Blue Hill Plaza, Suite 1501, 1st Floor
Pearl River, NY 10695
Tel: (201) 561-4911
Email: ekhalikar. raj@gmail.com


| NO. | DATE | REVISION | CHK |
|---|---|---|---|
| 00 | 08/01/23 | BID SET | RE |

DRAWN BY: RM
SCALE: 3/4"=1'-0"
DATE: 03.29.2022
JOB NO. XXXX

TYPICAL SECTIONS & DETAILS

DRAWING NO.
S10

PLOT DATE: 2023-08-03

© 2023 NADER GROUP-ASA, NADER HOUSE OF DESIGN

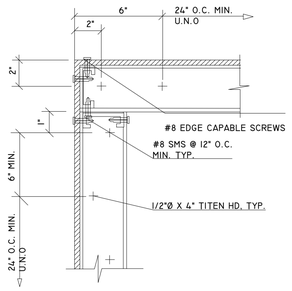


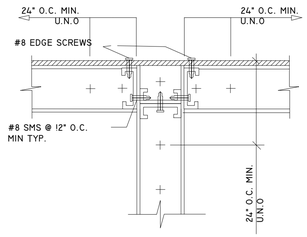


INTERSECTION OF SHEATHED AND UNSHEATED WALL

SMS CONNECTION

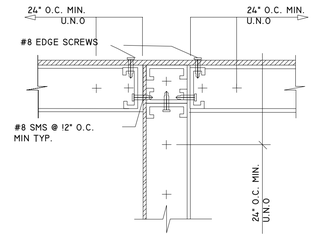


INTERSECTION OF SHEATHED WALLS

SMS CONNECTION

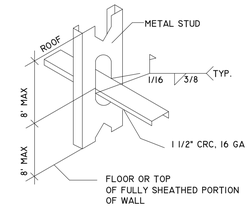


BRIDGE DETAIL @ 8' O.C.

WELDED CONNECTION

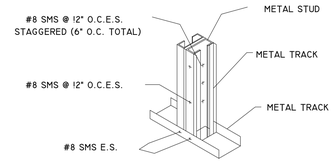


MULTIPLE STUD COLUMN

SMS CONNECTION

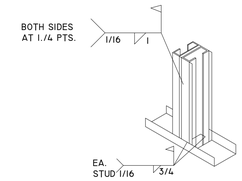


MULTIPLE STUD COLUMN

WELDED CONNECTION

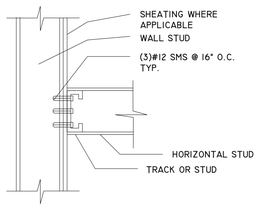


TYPICAL STUD TO TRACK CONNECTION

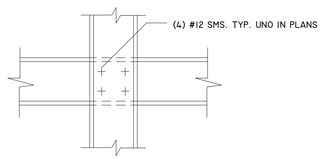


STUD TO STUD
SCREW CONNECTION

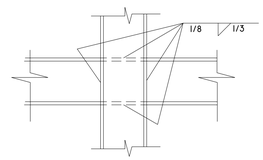


STUD TO STUD WELD CONNECTION

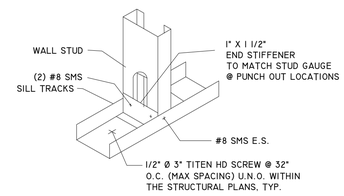


WALL STUD TO SILL ATTACHMENT

SMS CONNECTION
REQUIRED BRIDGING IF UNSHEATED PORTION OF
WALL IS GREATHER THAN 8'-0"
ROWS AT 4'-0" MAX

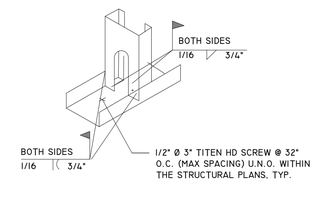


WELD ATTACHMENT

WELDED CONNECTION

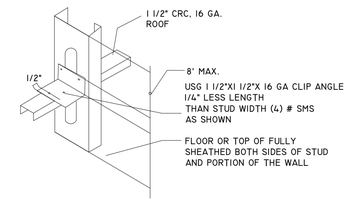


BRIDGE DETAIL @ 8' O.C. MAX

SMS CONNECTION

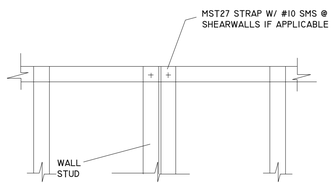


TYPICAL TRACK SPLICE ELEVATION

SMS CONNECTION

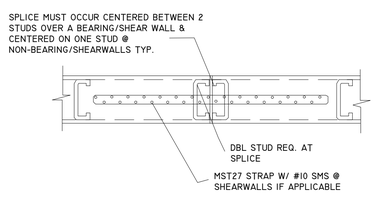


TYPICAL TRACK SPLICE PLAN

SMS CONNECTION

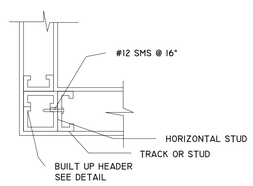


TYPICAL STUD TO TRACK CONNECTION
TO PERP. WALL

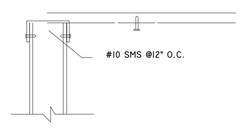


PERPENDICULAR TO FLUTES

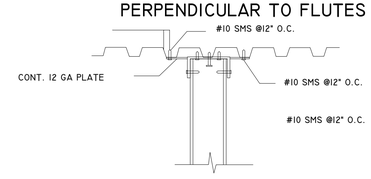


PARELLEL TO FLUTES

ATTACHMENT OF NON-BEARING
STUD TO ROOF/FLOOR

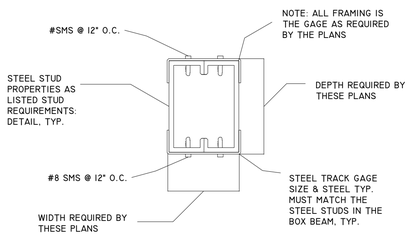


TYP. BOX HEADER

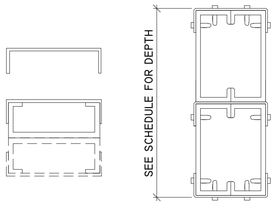


SPLIT HEADER DETAIL

WINDOW SILL FRAMING

| SPAN (FT) | HEADER DEPTH(IN) MIN. | MEMBER THICKNESS | W (IN) MIN. | # OF HEADER MEMBERS (DOUBLE AS STACKED BOX BEAMS) | MEMBER STYLE |
|---|---|---|---|---|---|
| 0'-6' | STACKED 6" BEAMS OR FULL 12" SECTION | .033" | 1.62" | 2 | S |
| >6' | 12 | .043" | 1.62" | 2 | S |

TYP. WINDOW SILL TRACK AND BOX

LEGEND:

1. DENOTES BLOCK
2. DENOTES CONC

GRAPHIC SCALE: 1/8" = 1'-0"
0' 5' 10' 15' 20' 25' 30'

# BYRAM MUNICIPAL BUILDING ADMINISTRATIVE/CIVIL

LOCATED AT 10 MANSFIELD DRIVE
BLOCK 365 - LOT 16.01
BOROUGH OF BYRAM
SUSSEX COUNTY, NEW JERSEY


NADER house+design
THE NADER GROUP, LLC
Architects, Engineers & Surveyors
111 Mill Street
Hackettstown, NJ 07840
p. 908.850.3500 | f. 908.441.5803
e. wassim.nader@thenadergroup.com
www.naderhouseofdesign.com


CERTIFICATE OF AUTHORIZATION
Engineering & Survey
No. 24GA28213500
Architecture
No. 21AC00126800

CONSTRUCTION DOCUMENTS


RAJ EKHALIKAR
N.J. PROFESSIONAL ENGINEER
NO 36498

**STRUCTURAL ENGINEER:**
**EXL Structural Consultants LLC**
**1 Blue Hill Plaza, Suite 1501, 1st Floor**
**Pearl River, NY 10695**
**Tel: (201) 561-4911**
**Email: ekhalikar. raj@gmail.com**


| NO. | DATE | REVISION | CHK |
|---|---|---|---|
| 00 | 08/01/23 | BID SET | RE |

**DRAWN BY: RM**
**SCALE: 1/8"=1'-0"**
**DATE: 03.29.2022**
**JOB NO. XXXX**

**TYPICAL SECTIONS & DETAILS**

DRAWING NO.
**S11**

PLOT DATE: 2023-08-03

© 2023 NADER GROUP-ASA, NADER HOUSE OF DESIGN

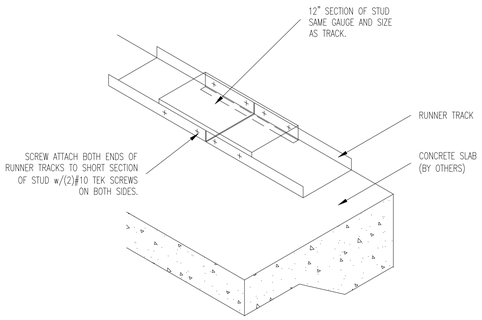


SPLICING OF RUNNER TRACK

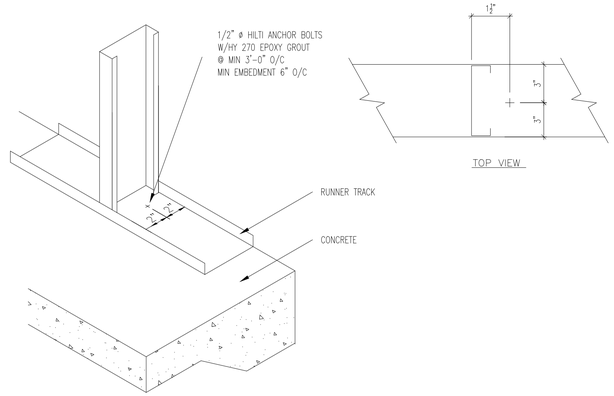


RUNNER CONNECTION TO FOUNDATION

BLOCKING NOTE
PLACE SOLID BLOCKING AT ENDS OF WALL SYSTEM, ADJACENT TO ALL OPENINGS, AND AT 10'-0" O.C. MAX

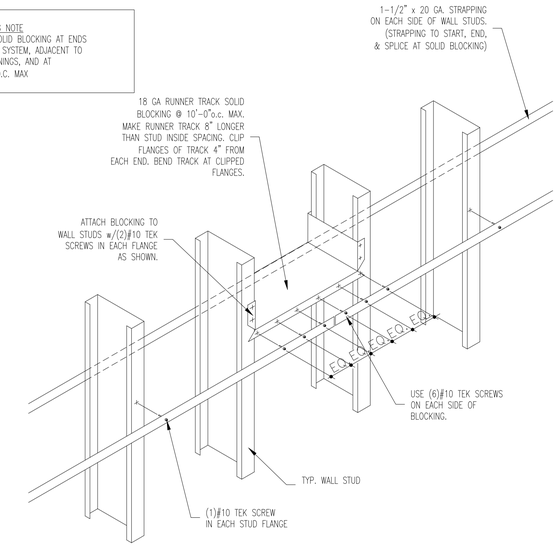


ALTERNATE DETAIL FOR BRIDGING

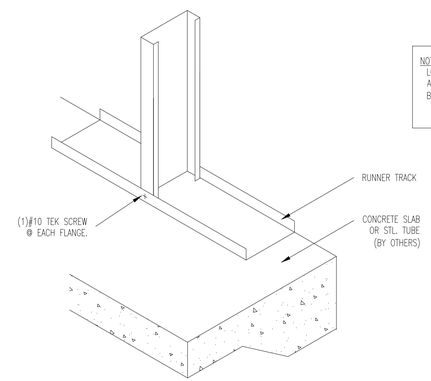


NOTE:
LOAD BEARING WALL FRAMING ABOVE AND BELOW MUST ALIGN WITH JOISTS, OTHERWISE CONTRACTOR SHALL BRING TO ENGINEER'S ATTENTION

RUNNER TRACK TO STUD CONNECTION

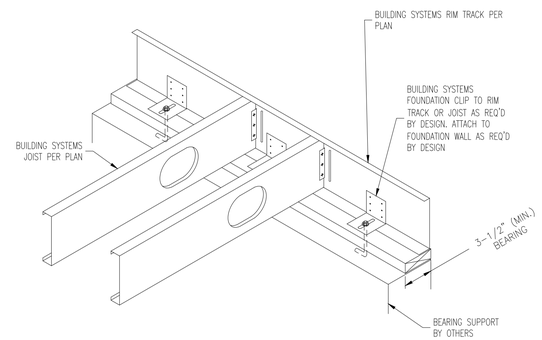


FOUNDATION CLIPS

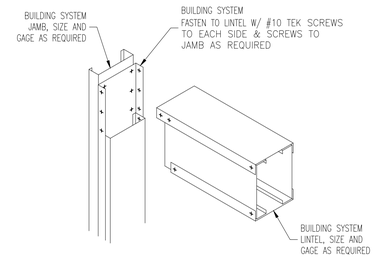


LINTEL SECTION

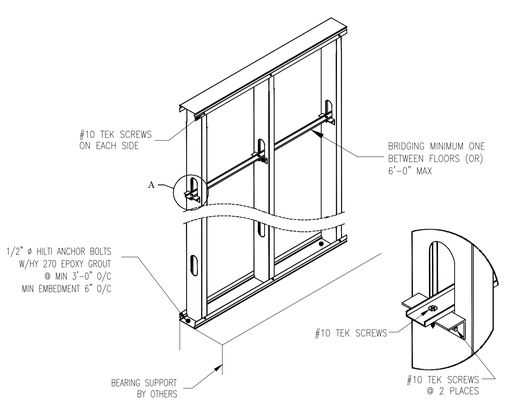


STUD IN TRACK ASMBLY

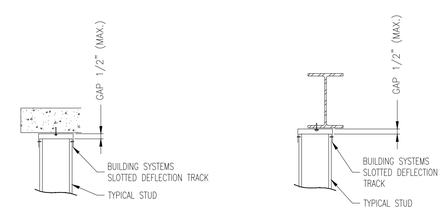


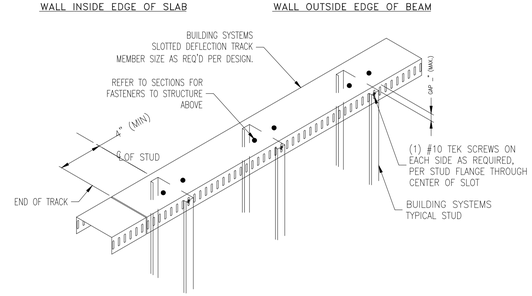


SLOTTED DEFLECTION TRACK

NOTES:

1. FOR GENERAL NOTES SEE DWG S1

LEGEND:

1. DENOTES BLOCK WALL
2. DENOTES CONC

GRAPHIC SCALE: 3/4" = 1'-0"
0' 1' 2' 3' 4' 5'

# BYRAM MUNICIPAL BUILDING ADMINISTRATIVE/CIVIL

LOCATED AT 10 MANSFIELD DRIVE
BLOCK 365 - LOT 16.01
BOROUGH OF BYRAM
SUSSEX COUNTY, NEW JERSEY


NADER house.design
THE NADER GROUP, LLC
Architects, Engineers & Surveyors
111 Mill Street
Hackettstown, NJ 07840
p. 908.850.3500 | f. 908.441.5803
e. wassim.nader@thenadergroup.com
www.naderhouseofdesign.com
CERTIFICATE OF AUTHORIZATION
Engineering & Survey
No. 24GA28213500
Architecture
No. 21AC00126800


CONSTRUCTION DOCUMENTS


RAJ EKHALIKAR
STATE OF NEW JERSEY LICENSED PROFESSIONAL ENGINEER RAJ EKHALIKAR GE36498
N.J. PROFESSIONAL ENGINEER
NO 36498

STRUCTURAL ENGINEER:
EXL Structural Consultants LLC
1 Blue Hill Plaza, Suite 1501, 1st Floor
Pearl River, NY 10695
Tel: (201) 561-4911
Email: ekhalikar. raj@gmail.com


| NO. | DATE | REVISION | CHK |
|---|---|---|---|
| 00 | 08/01/23 | BID SET | RE |

DRAWN BY: RM
SCALE: 3/4"=1'-0"
DATE: 03.29.2022
JOB NO. XXXX

TYPICAL SECTIONS & DETAILS

DRAWING NO.
S12

PLOT DATE: 2023-08-03

© 2023 NADER GROUP-ASA, NADER HOUSE OF DESIGN

1. THESE GENERAL NOTES, SYMBOL LIST AND DETAILS ARE APPLICABLE TO ALL HVAC/MECHANICAL DRAWINGS.

2. DRAWINGS ARE DIAGRAMMATIC. DETERMINE LOCATIONS OF SYSTEMS AND COMPONENTS IN FIELD. RELOCATE EXISTING WORK THAT INTERFERES WITH WORK OF THIS CONTRACT.

3. WORK IN THIS SECTION IS SPECIFIED ON THE SPECIFICATION SHEET

4. COORDINATE THIS WORK WITH THAT OF OTHER TRADES.

5. DIMENSIONS SHOWN ON PLAN ARE HORIZONTAL. DIMENSIONS SHOWN IN ELEVATION ARE VERTICAL EXCEPT IN WAY OF STRUCTURAL STEEL, DIMENSIONS ARE MEASURED PERPENDICULAR TO FLANGE.

6. NEITHER ACCURACY NOR COMPLETION OF SERVICES AND UTILITY LOCATIONS SHOWN ON DRAWINGS IS GUARANTEED. DETERMINE EXACT LOCATIONS OF EXISTING SERVICES AND UTILITIES IN FIELD, WHETHER OR NOT SHOWN ON DRAWINGS. EXERCISE CAUTION AND IDENTIFY LOCATIONS OF UNMARKED UTILITY LINES AS NECESSARY TO PERFORM WORK OF THIS SECTION.

7. MANUFACTURERS MODEL NUMBERS ARE SPECIFIED SOLELY TO ESTABLISH STANDARDS OF QUALITY FOR PERFORMANCE AND MATERIALS.

8. PRODUCT INSTALLATION SHALL ADHERE TO MANUFACTURERS RECOMMENDATIONS.

9. PROVIDE HANGERS, INSERTS, ANCHORS, SUPPLEMENTAL STEEL & SUPPORTS AS REQUIRED TO SUPPORT DUCTWORK, PIPING AND EQUIPMENT FROM STRUCTURE.

10. SCHEDULE WORK OF THIS SECTION TO AVOID INTERFERING WITH EXISTING OPERATIONS IN THE FACILITY.

11. COORDINATE ROOF PENETRATIONS WITH WORK OF OTHER SECTIONS AND WITH FLASHING REQUIREMENTS. MECHANICAL CONTRACTOR TO NOTIFY OWNER PRIOR TO STARTING WORK TO VERIFY COMPLIANCE WITH BOND AND WARRANTY OF EXISTING ROOF.

12. RUN DUCTS AND PIPING CONCEALED AND CLEAR OF CEILING INSERTS, UNLESS OTHERWISE SPECIFIED.

13. INSTALL THERMOSTATS 4' ABOVE FINISHED FLOOR OR AS DIRECTED OTHERWISE BY ARCHITECT.

14. STRUCTURAL WELDING SHALL BE CONTINUOUS 1/4" FILLET UNLESS REQUIRED OTHERWISE.

15. ALL NEW PIPING SHALL BE CONCEALED IN CEILING, WALL CAVITIES AND/OR UNDER SLAB, UNLESS OTHERWISE NOTED. EXISTING PIPING TO REMAIN BUT EXPOSED AS A RESULT OF DEMOLITION OPERATIONS SHALL BE RE-ROUTED/MODIFIED FOR CONCEALMENT IN CEILING OR WALL CAVITIES, OR UNDER SLAB, AT NO ADDITIONAL COST TO THE OWNER.

16. CONNECT NEW WORK TO EXISTING WORK IN A NEAT AND ACCEPTABLE MANNER. RESTORE EXISTING DISTURBED WORK TO ITS ORIGINAL CONDITION, INCLUDING MAINTENANCE OF WIRING CONTINUITY AS REQUIRED.

17. CONNECT NEW WORK TO EXISTING WORK WITH MINIMUM INTERFERENCE TO EXISTING FACILITIES. TEMPORARY SHUTDOWNS ARE PERMISSIBLE ONLY WITH WRITTEN CONSENT OF THE OWNER. ALARM AND EMERGENCY SYSTEMS ARE NOT TO BE INTERRUPTED.

18. FIRESTOPPING SHALL BE INSTALLED WHENEVER PIPING CROSSES FIRE RATED PARTITIONS. FIRE DAMPERS SHALL BE INSTALLED WHENEVER DUCTWORK CROSSES A FIRE RATED PARTITION. REFER TO THE ARCHITECTURAL PLANS FOR FIRE RATED PARTITION LOCATIONS. THE FIRESTOPPING SHALL MATCH OR EXCEED THE FIRE RATING OF THE PARTITION PENETRATED. ALL FIRESTOPPING SHALL BE A UL LISTED ASSEMBLY.

19. THE CONTRACTOR SHALL BRING ANY CONFLICTS IN THE DRAWINGS TO THE ATTENTION OF THE ENGINEER DURING THE BIDDING PROCESS. IF NOT BROUGHT UP TO THE ENGINEER DURING THE BIDDING PROCESS THE MORE EXPENSIVE OPTION SHALL BE CHOSEN FOR BIDDING PURPOSES.

20. HVAC CONTRACTOR IS RESPONSIBLE TO PROVIDE ACCESS PANELS FOR ANY CONCEALED HVAC WORK THAT MUST BE ACCESSIBLE EITHER BY CODE OR AS INDICATED IN THE DOCUMENTS. ALL ACCESS DOOR LOCATIONS SHALL BE REVIEWED AND APPROVED BY ARCHITECT PRIOR TO INSTALLATION OF DEVICE REQUIRING THE ACCESS PANEL. ALL ACCESS DOORS MUST MATCH THE FIRE RATING AND CONSTRUCTION TYPE OF THE CEILING OR WALL PENETRATION AS DESIGNATED ON THE ARCHITECTURAL DRAWINGS.

## AIR SYSTEMS

21. REFER TO THE ARCHITECTURAL REFLECTED CEILING PLANS FOR EXACT LOCATIONS OF AIR DEVICES.

22. INTERNAL AIRFLOW DIMENSIONS ARE SHOWN FOR DUCTS. INCREASE DUCT SIZE AS NECESSARY TO MAINTAIN FREE FLOW AREA INDICATED.

23. USE FLAT TRANSVERSE SEAM FOR DUCTWORK WHERE SPACE AVAILABLE DICTATES.

24. DIFFUSER SIZES SHOWN ARE NECK SIZES. REGISTERS AND GRILLE SIZES ARE NOMINAL.

25. PROVIDE VOLUME DAMPERS OR OTHER APPROVED BALANCING DEVICES AT DUCT BRANCHES AND RUN OUTS, AND AT REGISTER GRILLE AND DIFFUSER NECKS IN SUPPLY, RETURN AND EXHAUST DUCTWORK, WHETHER SHOWN OR NOT.

26. DUCTWORK DOWNSTREAM OF ALL AC UNITS SHALL BE ACOUSTICALLY LINED WITH 1" ACOUSTICAL LINING FOR A MINIMUM OF 15 FEET.

27. PROVIDE CLEARANCE IN FRONT OF ALL ELECTRIC CONTROL PANELS PER N.E.C. AND MFG. REQUIREMENTS.

## CONSUMABLES

28. THE CONTRACTOR SHALL REPLACE ALL CONSUMABLE EQUIPMENT ON THIS PROJECT AFTER FINAL TESTING AND RIGHT BEFORE THE EQUIPMENT IS TURNED OVER TO THE OWNER. THIS INCLUDES BUT IS NOT LIMITED TO ALL WATER AND AIR FILTERS ON THE PROJECT.

## CODE COMPLIANCE

29. ALL WORK PERFORMED MUST MEET ALL APPLICABLE CODES AS REQUIRED BY THE AUTHORITY HAVING JURISDICTION.

# GENERAL NOTES

| | |
|---|---|
| AAV | AUTOMATIC AIR VENT |
| AC | AIR CONDITIONING |
| ACU | AIR CONDITIONING UNIT |
| AD | ACCESS DOOR |
| AFF | ABOVE FINISHED FLOOR |
| AHU | AIR HANDLING UNIT |
| BG | BOTTOM GRILLE |
| BFC | BELOW FINISHED CEILING |
| BHP | BRAKE HORSEPOWER |
| BR | BOTTOM REGISTER |
| BT | BOTTOM THROAT |
| BTU | BRITISH THERMAL UNIT |
| BTUH | BTU PER HOUR |
| CD | CEILING DIFFUSER |
| CFM | CUBIC FEET PER MINUTE |
| CG | CEILING GRILLE |
| CLG | CEILING |
| COND | CONDENSATE |
| CR | CEILING REGISTER |
| CUH | CABINET UNIT HEATER |
| CV | CONSTANT VOLUME |
| DB | DRY BULB |
| DIAM | DIAMETER |
| DMPR | DAMPER |
| DX | DIRECT EXPANSION |
| EG | EXHAUST GRILLE |
| EX | EXISTING TO REMAIN |
| EAT | ENTERING AIR TEMPERATURE |
| EDB | ENTERING DRY BULB TEMPERATURE |
| EF | EXHAUST FAN |
| EL | ELEVATION |
| EWB | ENTERING WET BULB |
| EWT | ENTERING WATER TEMPERATURE |
| EXH | EXHAUST |
| °F | DEGREES FAHRENHEIT |
| FA | FREE AREA (SQ.FT.) |
| FAI | FRESH AIR INTAKE |
| FC | FLEXIBLE CONNECTION |
| FD | FIRE DAMPER |
| FIN FL | FINISHED FLOOR |
| FLA | FULL LOAD AMPERES |
| FPM | FEET PER MINUTE |
| GAL | GALLON |
| GPH | GALLONS PER HOUR |
| GPM | GALLONS PER MINUTE |
| HT | HEIGHT |
| HR | HOUR |
| HV | HEATING AND VENTILATING |
| HX | HEAT EXCHANGER |
| HZ | FREQUENCY |
| IN | INCH OR INCHES |
| LAT | LEAVING AIR TEMPERATURE |
| LD | LINEAR DIFFUSER |
| LF | LINEAR FEET |
| LWB | LEAVING WET BULB TEMPERATURE |
| LWT | LEAVING WATER TEMPERATURE |
| MBH | THOUSAND BTU PER HOUR |
| MER | MECHANICAL EQUIPMENT ROOM |
| MIN | MINIMUM |
| NC, N.C. | NORMALLY CLOSED |
| NIC | NOT IN CONTRACT |
| NO, N.O. | NORMALLY OPEN |
| NTS, N.T.S. | NOT TO SCALE |
| NO. | NUMBER |
| OA | OUTSIDE AIR |
| OAI | OUTSIDE AIR INTAKE |
| OED | OPEN END DUCT |
| PSI | POUNDS PER SQUARE INCH |
| PSIA | PSI ABSOLUTE |
| PSIG | PSI GAUGE |
| RA | RETURN AIR |
| RE | EXISTING TO BE REMOVED |
| REX | EXISTING TO BE RELOCATED |
| RE | REMOVE EXISTING |
| RF | RETURN FAN |
| RG | RETURN GRILLE |
| RH | RELATIVE HUMIDITY |
| RHC | REHEAT COIL |
| RLA | RUNNING LOAD AMPS |
| RPM | REVOLUTIONS PER MINUTE |
| (RRO) | EXISTING TO BE REMOVED AND RETURN TO OWNER |
| SA | SUPPLY AIR |
| SD | SMOKE DAMPER |
| SF | SUPPLY FAN |
| SP | STATIC PRESSURE |
| SPEC | SPECIFICATION |
| TDH | TOTAL DYNAMIC HEAD |
| TEMP | TEMPERATURE |
| TG | TOP GRILLE |
| TYP | TYPICAL |
| TR | TOP REGISTER |
| UH | UNIT HEATER |
| VFD | VARIABLE FREQUENCY DRIVE |
| VAV | VARIABLE AIR VOLUME UNIT |
| VIV | VARIABLE INLET VANES |
| W | WIDTH |
| w/ | WITH |
| WB | WET BULB |
| WMS | WIRE MESH SCREEN |

# HVAC ABBREVIATIONS

NOT ALL SYMBOLS AND ABBREVIATIONS SHOWN ON THIS PLAN ARE USED IN THE PROCEEDING DRAWINGS.

| SYMBOL | DESCRIPTION |
|---|---|
| | SINGLE LINE DUCTWORK OR EQUIPMENT - NEW |
| | SINGLE LINE DUCTWORK OR EQUIPMENT - EXISTING |
| | DUCTWORK TO BE REMOVED |
| | DUCTWORK WITH ACOUSTIC LINING |
| | DUCT UNDER POSITIVE PRESSURE (SUPPLY AIR OR FAN DISCHARGE) |
| | DUCT UNDER NEGATIVE PRESSURE (RETURN, EXHAUST OR OUTSIDE AIR) |
| VD | VOLUME DAMPER - THE "VD" MAY NOT BE SHOWN ON THE PLANS. |
| FSD | FIRE SMOKE DAMPER AND ACCESS DOOR |
| FD | FIRE DAMPER AND ACCESS DOOR |
| BDD | BACK DRAFT DAMPER |
| M | MOTORIZED DAMPER |
| R | RISE IN DUCTWORK (IN DIRECTION OF AIR FLOW) |
| D | DROP IN DUCTWORK (IN DIRECTION OF AIR FLOW) |
| § OR CFM | CUBIC FEET PER MINUTE |
| Ø | DIAMETER |
| ⌀ | SQUARE FEET |
| | POINT OF CONNECTION |
| | POINT OF DISCONNECTION |
| D DD | DUCT SMOKE DETECTOR |
| | 2-WAY SHUT OFF VALVE |
| | 3-WAY SHUT OFF VALVE |
| | AIR SEPARATOR |
| | AIR FLOW ARROW |
| | AIR FLOW |
| | AIR VENT |
| | ANCHOR |
| | ANGLE VALVE - SIDE |
| | ANGLE VALVE - TOP |
| | ARROW |
| | BALANCE VALVE |
| | BM PUMP |
| | CAP |
| | CHECK VALVE |
| | CONTROL VALVE |
| | CONVERTER |

| SYMBOL | DESCRIPTION |
|---|---|
| | DOOR LOUVER L |
| | DOOR LOUVER R |
| | DRAIN VALVE |
| D | DROP |
| | REDUCER |
| | EXPANSION JOINT |
| | EXPANSION TANK |
| | FLANGE |
| M | FLOW METER |
| | GUIDE |
| | UNION |
| | HUMIDISTAT |
| | LCSH VALVE |
| | P BREAK |
| | PETCOCK |
| | PUMP |
| | PRESSURE GAUGE |
| | PRESSURE RELIEF VALVE |
| CD-X X" Ø NECK XXX CFM | SUPPLY DIFFUSER |
| RG-X -or- EG-X X" Ø NECK XXX CFM | RETURN -OR- EXHAUST GRILLE |
| | SUPPLY DIFFUSER WITH BLANKING PLATE |
| | LINEAR DIFFUSER -OR- LINEAR RETURN |
| | SIDE WALL -OR- DUCT MOUNTED DIFFUSER |
| | VANED ELBOW (SEE DETAIL) OR RADIUS ELBOW |
| | FLEXIBLE DUCT |
| | FLEXIBLE DUCT CONNECTION |
| | VERTICAL DUCT DROP (IN DIRECTION OF AIRFLOW) |

| SYMBOL | DESCRIPTION |
|---|---|
| | VERTICAL DUCT RISE (IN DIRECTION OF AIRFLOW) |
| | SLOTTED LINEAR DIFFUSER WITH PLENUM |
| | PROPELLER FAN |
| P/T | PT PLUG |
| RAD INFO | RAD INFO |
| | REDUCER |
| | RELIEF VALVE |
| R | RISE |
| | SHUT OFF VALVE |
| | STEAM TRAP |
| | STRAINER |
| | THERMAL WELL |
| | THERMOMETER |
| | THROTTLE VALVE |
| U | UNDERCUT |
| T | THERMOSTAT |
| H | HUMIDISTAT |
| | VARIABLE AIR VOLUME BOX |
| | UNIT HEATER |
| | ROOFTOP EXHAUST FAN |
| M | PIPING MANIFOLD PITCH POCKET FOR REFRIGERATION PIPING |
| P | PIPING PENETRATION PITCH POCKET FOR ELECTRICAL CONDUIT |
| F | ANSUL PULL STATION |
| XXX X | EQUIPMENT IDENTIFICATION TAG |
| RTU-X | ASSOCIATED EQUIPMENT TAG I.E.: THERMOSTAT ASSOCIATED WITH RTU-X |
| X | DRAWING NOTE - 'X' DENOTES NOTE NUMBER SHOWN ON PLAN. |
| X | KEY NOTE - 'X' DENOTES NOTE NUMBER SHOWN FOR ALL HVAC PLANS. |
| X | DEMOLITION NOTE - 'x' DENOTES NOTE NUMBER SHOWN ON PLAN |

# SYMBOL LEGENDS AND ABBREVIATIONS

## PROJECT NOTES:

THE CONTRACTOR SHALL RECEIVE AND REVIEW ALL OF THE PROJECTS DRAWINGS AND SPECIFICATIONS SUCH AS ARCHITECTURAL, STRUCTURAL, HVAC, ELECTRICAL, PLUMBING, FIRE ALARM, SPRINKLER, SITE, ETC. TO UNDERSTAND THE FULL SCOPE OF WORK. FAILURE TO RECEIVE AND REVIEW THOSE PLANS DURING BIDDING WILL RESULT IN THE DENIAL OF EXTRA'S.

ALL DUCTWORK LOCATED ABOVE ELECTRICAL PANELS MUST BE SUPPLIED WITH A DRIP PAN THAT IS PIPED TO THE NEAREST AVAILABLE DRAIN AS PER NEC SEC.110.26 (F)(1)(b).

ALL CONTRACTOR WORK MUST COMPLY WITH THE GOVERNING CODES & REFERENCES:

1. NJIBC 2021, NJIMC 2021, NJIECC 2021 NJIPC 2021, NJIFGC 2021, NJIFC 2021

SUMMER OUTDOOR DESIGN CONDITIONS:

1. DESIGN REGION: STANHOPE, NJ
2. DRY BULB: 86.6°F
3. WET BULB: 72.2°F

SUMMER INDOOR DESIGN CONDITIONS:

1. DRY BULB: 72°F
2. RELATIVE HUMIDITY: 50% MAXIMUM

WINTER OUTDOOR DESIGN CONDITIONS:

1. DESIGN REGION: STANHOPE, NJ
2. DRY BULB: 9.4°F

WINTER INDOOR DESIGN CONDITIONS:

1. DRY BULB: 70°F
2. RELATIVE HUMIDITY: NO MINIMUM RH CONTROL PROVIDED

VENTILATION REQUIREMENTS:

1. PER THE APPLICABLE MECHANICAL CODE LISTED ABOVE.

FILTRATION:

1. 30% PLEATED PRE-FILTER MEDIA

SEISMIC DESIGN CRITERIA:

PROVIDE SEISMIC RESTRAINTS IN ACCORDANCE WITH THE APPLICABLE BUILDING CODE STATED ABOVE.

ALL ROOF MOUNTED EQUIPMENT SHALL BE ABLE TO WITHSTAND THE FOLLOWING WIND SPEEDS PER THE BUILDING CODE SECTION 1609. WIND SPEED: 100MPH TIMES ASCE STANDARD 07-16 FORCE FACTOR OF 1.9 = 190MPH

# CODE REVIEW


| | |
|---|---|
| M-100 | HVAC COVER SHEET |
| M-200 | HVAC FIRST FLOOR PLAN |
| M-201 | HVAC ATTIC PLAN |
| M-202 | HVAC ROOF PLAN |
| M-300 | HVAC SCHEDULES |
| M-301 | REFRIGERANT PIPING DIAGRAMS |
| M-302 | HVAC DETAILS |
| M-303 | HVAC DETAILS AND SCHEDULES |
| M-400 | HVAC CONTROLS |


# DRAWING LIST

BYRAM MUNCIPAL BUILDING
ADMINISTRATIVE / CIVIL
10 MANSFIELD DRIVE
LOTS 16.01 - BLOCK 365
BYRAM TOWNSHIP
SUSSEX COUNTY, NEW JERSEY


THE NADER GROUP, LLC
Architects, Engineers, & Surveyors
111 Mill Street
Hackettstown, NJ 07840
p.908.850.3500 | f.908.441.5803
e. wassim.nader@thenadergroup.com
www.naderhouseofdesign.com

BRIAN D. TANNENHAUS


ISSUED FOR BID
NOT FOR CONSTRUCTION
08/01/2023

NJ PROFESSIONAL ENGINEER
NO. GE 45801

DATE:___XX/XX/XXXX___


BDI engineering
NJ CERTIFICATE OF AUTHORIZATION – 24GA28116100
BD Engineering, LLC
44 Main Street, Farmingdale, NJ 07727
732-886-5432
www.bd-engineering.com Project No. 210133


| No. | DATE | REVISION |
|---|---|---|
| 00 | 08/01/23 | BID SET |

DRW BY: DRAWNBY
SCALE: AS NOTED
DATE: JUNE 16, 2023
JOB No. 18.TNG029
DRAWING Name
HVAC COVER SHEET

DRAWING No.
M-100

8/4/2023 3:58 PM

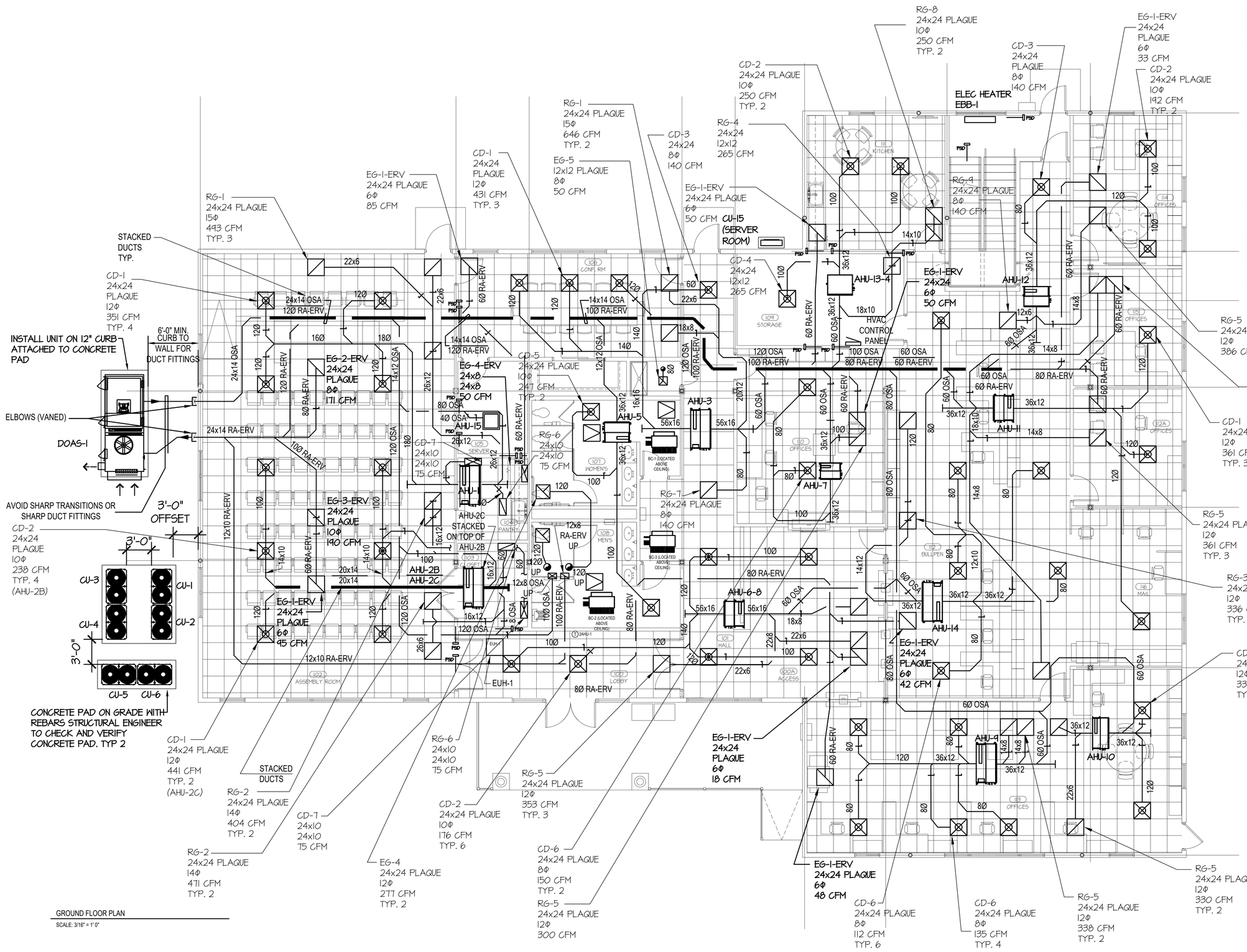


GROUND FLOOR PLAN

SCALE: 3/16" = 1'0"

## GENERAL NOTES:

1. THE EXACT MOUNTING HEIGHTS AND LOCATIONS OF ALL HVAC EQUIPMENT SHALL BE FIELD VERIFIED AND COORDINATED WITH ALL OTHER MECHANICAL, ELECTRICAL, ARCHITECTURAL AND STRUCTURAL SYSTEMS.

2. VERIFY ALL EQUIPMENT VOLTAGES WITH THE ELECTRICAL CONTRACTOR PRIOR TO ORDERING EQUIPMENT.

3. PROVIDE DISCONNECT SWITCHES FOR ALL HVAC EQUIPMENT INCLUDING WEATHERPROOF DISCONNECT AS REQUIRED.

4. PROVIDE PHASE LOSS PROTECTION FOR ALL POLY-PHASE MOTOR DEVICES.

5. THE FINAL LOCATION OF AIR DEVICES MUST BE COORDINATED WITH THE REFLECTED CEILING PLAN AND ALL OTHER MECHANICAL, ELECTRICAL, FIRE PROTECTION, ARCHITECTURAL, AND STRUCTURAL SYSTEMS.

6. PROVIDE FLEXIBLE CONNECTIONS AT ALL DUCT CONNECTIONS TO VIBRATING EQUIPMENT. THESE CONNECTIONS SHALL BE INSTALLED IN CLOSE PROXIMITY TO SUCH EQUIPMENT.

7. ALL CEILING MOUNTED EQUIPMENT MUST BE SUPPORTED DIRECTLY FROM BUILDING STRUCTURE WITH COMBINATION SPRING AND NEOPRENE-IN-SHEAR HANGERS AND ROD. PROVIDE SUPPLEMENTARY STEEL AS REQUIRED TO ADEQUATELY SUPPORT THE LOAD.

8. ALL ROOFTOP HVAC EQUIPMENT SHALL BE INSTALLED SUFFICIENTLY AWAY FROM EDGE OF ROOF SO AS TO ALLOW FOR THE INSTALLATION OF PROPER FLASHING TO ENSURE A WEATHER TIGHT SEAL. IN ADDITION, ADEQUATE CLEARANCES SHALL BE PROVIDED FOR CLEANING AND MAINTENANCE REQUIREMENTS. THE FINAL LOCATION OF ALL ROOFTOP UNITS MUST ALSO COMPLY WITH ALL OSHA SAFETY REQUIREMENTS. WHEN MINIMUM REQUIRED DISTANCE CAN NOT BE MAINTAINED, IT SHALL BE THE RESPONSIBILITY OF THE GENERAL CONTRACTOR TO PROVIDE AND INSTALL CODE COMPLIANT SAFETY RAILS.

9. ALL FRESH AIR INTAKES INCLUDING GOOSENECKS, LOUVERS OR ROOF MOUNTED INTAKE HOODS REQUIRE INSECT SCREENS.

# BYRAM MUNICIPAL BUILDING
## ADMINISTRATIVE / CIVIL
10 MANSFIELD DRIVE,
LOTS 16.01 - BLOCK 365
BYRAM TOWNSHIP
SUSSEX COUNTY, NEW JERSEY


THE NADER GROUP, LLC
Architects, Engineers, & Surveyors
111 Mill Street
Hackettstown, NJ 07840
p.908.850.3500 | f.908.441.5803
e. wassim.nader@thenadergroup.com
www.naderhouseofdesign.com

BRIAN D. TANNENHAUS


ISSUED FOR BID
NOT FOR CONSTRUCTION
08/01/2023

NJ PROFESSIONAL ENGINEER
NO. GE 45801
DATE: XX/XX/XXXX


BD engineering
NJ CERTIFICATE OF AUTHORIZATION – 24GA28116100
BD Engineering, LLC
44 Main Street, Farmingdale, NJ 07727
732-886-5432
www.bd-engineering.com Project No. 210133


| No. | DATE | REVISION |
|---|---|---|
| 00 | 08/01/23 | BID SET |

DRW BY: EH
SCALE: AS NOTED
DATE: JUNE 16, 2023
JOB No. 18.TNG029
DRAWING Name
HVAC FIRST FLOOR PLAN

DRAWING No.
M-200

8/4/2023 3:58 PM

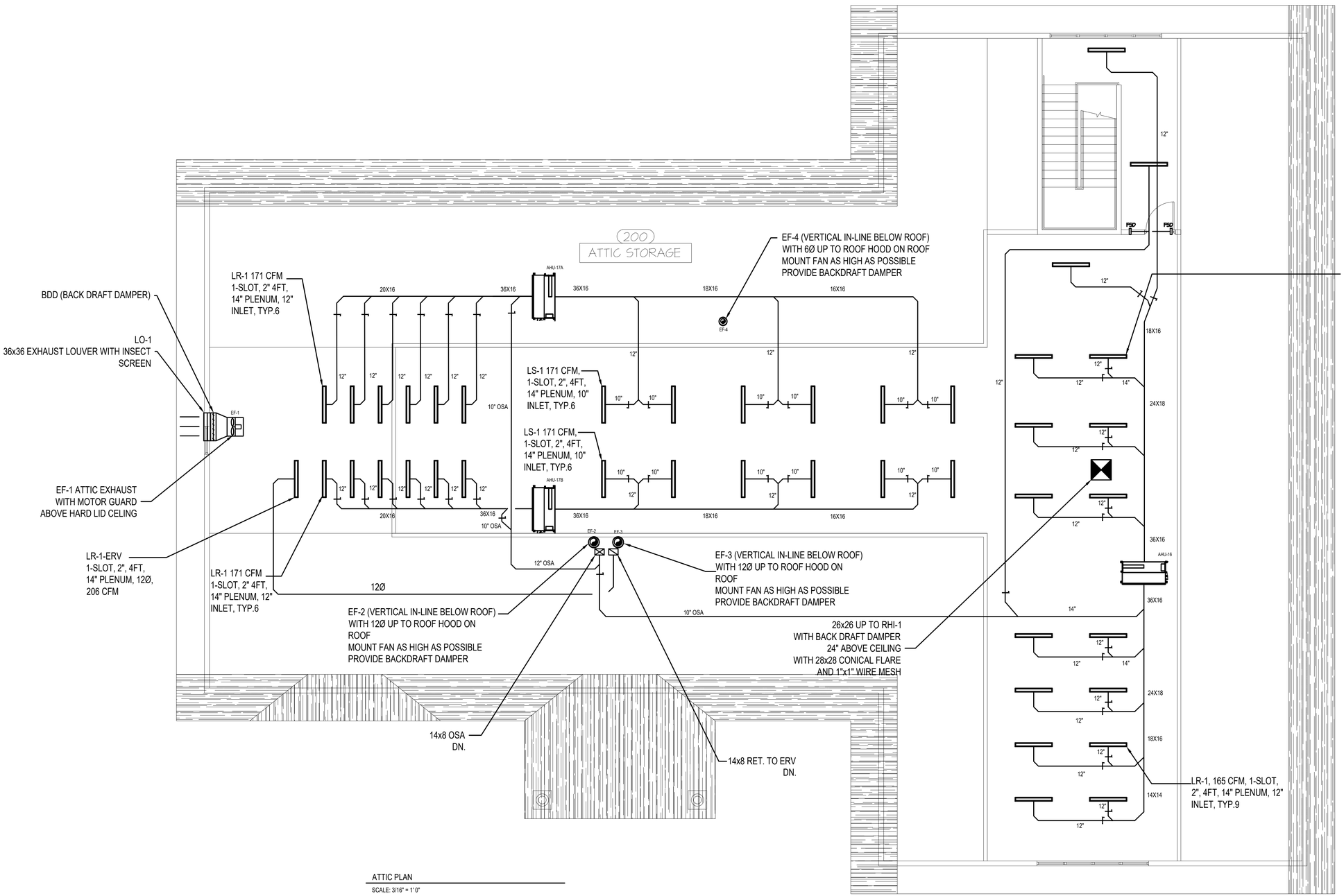


ATTIC PLAN

SCALE: 3/16" = 1' 0"

## GENERAL NOTES:

1. THE EXACT MOUNTING HEIGHTS AND LOCATIONS OF ALL HVAC EQUIPMENT SHALL BE FIELD VERIFIED AND COORDINATED WITH ALL OTHER MECHANICAL, ELECTRICAL, ARCHITECTURAL AND STRUCTURAL SYSTEMS.

2. VERIFY ALL EQUIPMENT VOLTAGES WITH THE ELECTRICAL CONTRACTOR PRIOR TO ORDERING EQUIPMENT.

3. PROVIDE DISCONNECT SWITCHES FOR ALL HVAC EQUIPMENT INCLUDING WEATHERPROOF DISCONNECT AS REQUIRED.

4. PROVIDE PHASE LOSS PROTECTION FOR ALL POLY-PHASE MOTOR DEVICES.

5. THE FINAL LOCATION OF AIR DEVICES MUST BE COORDINATED WITH THE REFLECTED CEILING PLAN AND ALL OTHER MECHANICAL, ELECTRICAL, FIRE PROTECTION, ARCHITECTURAL, AND STRUCTURAL SYSTEMS.

6. PROVIDE FLEXIBLE CONNECTIONS AT ALL DUCT CONNECTIONS TO VIBRATING EQUIPMENT. THESE CONNECTIONS SHALL BE INSTALLED IN CLOSE PROXIMITY TO SUCH EQUIPMENT.

7. ALL CEILING MOUNTED EQUIPMENT MUST BE SUPPORTED DIRECTLY FROM BUILDING STRUCTURE WITH COMBINATION SPRING AND NEOPRENE-IN-SHEAR HANGERS AND ROD. PROVIDE SUPPLEMENTARY STEEL AS REQUIRED TO ADEQUATELY SUPPORT THE LOAD.

8. ALL ROOFTOP HVAC EQUIPMENT SHALL BE INSTALLED SUFFICIENTLY AWAY FROM EDGE OF ROOF SO AS TO ALLOW FOR THE INSTALLATION OF PROPER FLASHING TO ENSURE A WEATHER TIGHT SEAL. IN ADDITION, ADEQUATE CLEARANCES SHALL BE PROVIDED FOR CLEANING AND MAINTENANCE REQUIREMENTS. THE FINAL LOCATION OF ALL ROOFTOP UNITS MUST ALSO COMPLY WITH ALL OSHA SAFETY REQUIREMENTS. WHEN MINIMUM REQUIRED DISTANCE CAN NOT BE MAINTAINED, IT SHALL BE THE RESPONSIBILITY OF THE GENERAL CONTRACTOR TO PROVIDE AND INSTALL CODE COMPLIANT SAFETY RAILS.

9. ALL FRESH AIR INTAKES INCLUDING GOOSENECKS, LOUVERS OR ROOF MOUNTED INTAKE HOODS REQUIRE INSECT SCREENS.

# BYRAM MUNCIPAL BUILDING
## ADMINISTRATIVE / CIVIL
10 MANSFIELD DRIVE,
LOTS 16.01 - BLOCK 365
BYRAM TOWNSHIP
SUSSEX COUNTY, NEW JERSEY

THE NADER GROUP, LLC
Architects, Engineers, & Surveyors
111 Mill Street
Hackettstown, NJ 07840
p.908.850.3500 | f.908.441.5803
e. wassim.nader@thenadergroup.com
www.naderhouseofdesign.com

BRIAN D. TANNENHAUS

ISSUED FOR BID
NOT FOR CONSTRUCTION
08/01/2023

NJ PROFESSIONAL ENGINEER
NO. GE 45801

DATE: XX/XX/XXXX

BD engineering
NJ CERTIFICATE OF AUTHORIZATION – 24GA28116100
BD Engineering, LLC
44 Main Street, Farmingdale, NJ 07727
732-886-5432
www.bd-engineering.com Project No. 210133

| No. | DATE | REVISION |
|---|---|---|
| 00 | 08/01/23 | BID SET |

DRW BY: DRAWNBY
SCALE: AS NOTED
DATE: JUNE 16, 2023
JOB No. 18.TNG029
DRAWING Name
HVAC ATTIC PLAN
DRAWING No.
M-201

8/4/2023 3:59 PM

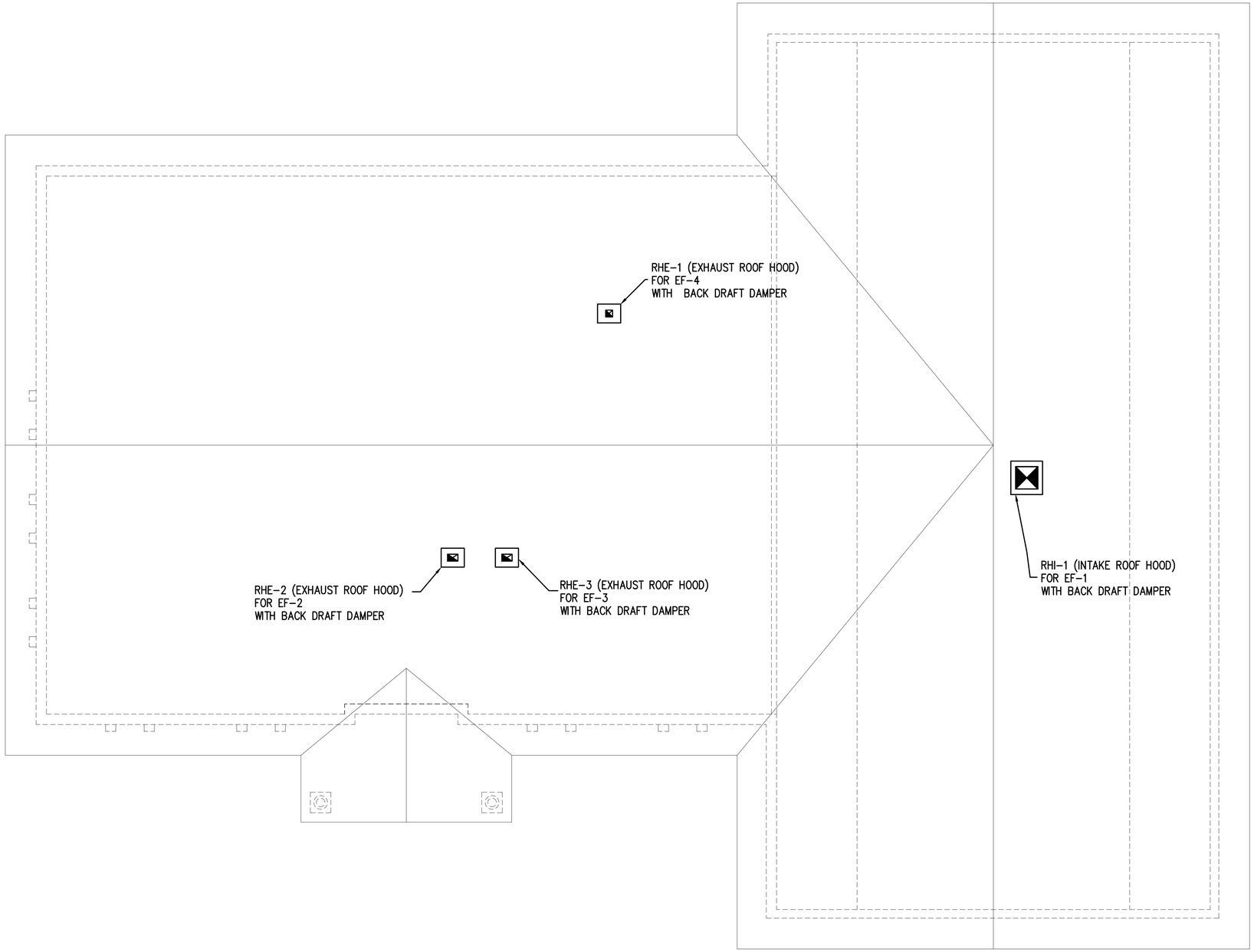


## GENERAL NOTES:

1. THE EXACT MOUNTING HEIGHTS AND LOCATIONS OF ALL HVAC EQUIPMENT SHALL BE FIELD VERIFIED AND COORDINATED WITH ALL OTHER MECHANICAL, ELECTRICAL, ARCHITECTURAL AND STRUCTURAL SYSTEMS.

2. VERIFY ALL EQUIPMENT VOLTAGES WITH THE ELECTRICAL CONTRACTOR PRIOR TO ORDERING EQUIPMENT.

3. PROVIDE DISCONNECT SWITCHES FOR ALL HVAC EQUIPMENT INCLUDING WEATHERPROOF DISCONNECT AS REQUIRED.

4. PROVIDE PHASE LOSS PROTECTION FOR ALL POLY-PHASE MOTOR DEVICES.

5. THE FINAL LOCATION OF AIR DEVICES MUST BE COORDINATED WITH THE REFLECTED CEILING PLAN AND ALL OTHER MECHANICAL, ELECTRICAL, FIRE PROTECTION, ARCHITECTURAL, AND STRUCTURAL SYSTEMS.

6. PROVIDE FLEXIBLE CONNECTIONS AT ALL DUCT CONNECTIONS TO VIBRATING EQUIPMENT. THESE CONNECTIONS SHALL BE INSTALLED IN CLOSE PROXIMITY TO SUCH EQUIPMENT.

7. ALL CEILING MOUNTED EQUIPMENT MUST BE SUPPORTED DIRECTLY FROM BUILDING STRUCTURE WITH COMBINATION SPRING AND NEOPRENE-IN-SHEAR HANGERS AND ROD. PROVIDE SUPPLEMENTARY STEEL AS REQUIRED TO ADEQUATELY SUPPORT THE LOAD.

8. ALL ROOFTOP HVAC EQUIPMENT SHALL BE INSTALLED SUFFICIENTLY AWAY FROM EDGE OF ROOF SO AS TO ALLOW FOR THE INSTALLATION OF PROPER FLASHING TO ENSURE A WEATHER TIGHT SEAL. IN ADDITION, ADEQUATE CLEARANCES SHALL BE PROVIDED FOR CLEANING AND MAINTENANCE REQUIREMENTS. THE FINAL LOCATION OF ALL ROOFTOP UNITS MUST ALSO COMPLY WITH ALL OSHA SAFETY REQUIREMENTS. WHEN MINIMUM REQUIRED DISTANCE CAN NOT BE MAINTAINED, IT SHALL BE THE RESPONSIBILITY OF THE GENERAL CONTRACTOR TO PROVIDE AND INSTALL CODE COMPLIANT SAFETY RAILS.

9. ALL FRESH AIR INTAKES INCLUDING GOOSENECKS, LOUVERS OR ROOF MOUNTED INTAKE HOODS REQUIRE INSECT SCREENS.

BYRAM MUNCIPAL BUILDING
ADMINISTRATIVE / CIVIL
10 MANSFIELD DRIVE,
LOTS 16.01 - BLOCK 365
BYRAM TOWNSHIP
SUSSEX COUNTY, NEW JERSEY

THE NADER GROUP, LLC
Architects, Engineers, & Surveyors
111 Mill Street
Hackettstown, NJ 07840
p.908.850.3500 | f.908.441.5803
e. wassim.nader@thenadergroup.com
www.naderhouseofdesign.com

BRIAN D. TANNENHAUS

ISSUED FOR BID
NOT FOR CONSTRUCTION
08/01/2023

NJ PROFESSIONAL ENGINEER
NO. GE 45801

DATE: XX/XX/XXXX

BD engineering
NJ CERTIFICATE OF AUTHORIZATION – 24GA28116100
BD Engineering, LLC
44 Main Street, Farmingdale, NJ 07727
732-886-5432
www.bd-engineering.com Project No. 210133

| No. | DATE | REVISION |
|---|---|---|
| 00 | | |
| | 08/01/23 | BID SET |

DRW BY: DRAWNBY
SCALE: AS NOTED
DATE: JUNE 16, 2023
JOB No. 18.TNG029
DRAWING Name
HVAC ROOF PLAN

DRAWING No.
M-202

8/4/2023 3:59 PM

## DOAS-1 PACKAGEDD UNIT SCHEDULE (ADMIN. BLDG.)

| TAG | SERVICE | LOCATION | DUCT CONNECTIONS CONFIG. | MFGR. | MODEL # | SUPPLY FAN | | | | | | EXHAUST FAN | | | | | | POWER EXHAUST | ECONOM. |
|---|---|---|---|---|---|---|---|---|---|---|---|---|---|---|---|---|---|---|---|
| | | | | | | SA CFM | OSA (CFM) | ESP (IN. WG.) | TSP (IN. WG.) | HP | VFD | EA CFM | BALANCE (CFM) | ESP (IN. WG.) | TSP (IN. WG.) | HP | VFD | YES | YES |
| DOAS-1 | ADMIN. BLDG. | OUTSIDE ON PAD ON GRADE | DUCTED SIDE SHOT | TRANE | OABD060 | 1635 | 1635 | 2 | 3.31 | 2 | YES | 1635 | 831 | 2 | 2.98 | 2 | YES | ECM MOTOR W/ BARDMETRIC DAMPER | 2-POS RA AND OSA DAMPERS |

| TAG | ERV WHEEL | | | | | | | | | | | | | | | | | | | COOLING | | | | | | | | HEATING | | | | | | | | FILTERS | EER/ IEER | MCA | MAX. FUSE | V/PH/HZ | VIBRATION ISOLATION | | OPER. WT (LBS) | NOTES |
|---|---|---|---|---|---|---|---|---|---|---|---|---|---|---|---|---|---|---|---|---|---|---|---|---|---|---|---|---|---|---|---|---|---|---|---|---|---|---|---|---|---|---|---|---|---|
| | SEASON | OAS TEMP. (F) | OAS TEMP. (wb F) | SA TEMP. (F) | SA TEMP. (wb F) | OAS (CFM) | SA (CFM) | RA TEMP. (F) | RA TEMP. (wb F) | EA TEMP. (F) | EA TEMP. (wb F) | RA (CFM) | EA (CFM) | OSA ESP ("WC) | EA ESP ("WC) | TONS | CAPACITY - (MBH) | | | AIR TEMP (°F) | | | | PRE-HEATER | | | | POST-HEATER | | | | EFFICIENCY | | | | | TYPE | STAT. DEFL. (IN.) | | |
| | | | | | | | | | | | | | | | | | TOTAL - (MBH) | SENSIBLE - (MBH) | LATENT (MBH) | ENT DB | ENT WB | LVG DB | LVG WB | KW | OSA (CFM) | EAT | LAT | KW | OSA (CFM) | EAT | LAT | | | | | | | | | | |
| DOAS-1 | SUMMER | 95 | 78 | 80.1 | 67.7 | 1635 | 1635 | 75 | 63 | 89.6 | 74.2 | 1635 | 1635 | 1.01 | 1.01 | 5.32 | 63.8 | 46.1 | 17.7 | 80.1 | 67.7 | 55 | 54 | 10.0 | 1635 | 5.0 | 24.56 | 10.0 | 1635 | 60.1 | 79.4 | MERV 8 | 17.5 | 88.3 | 90 | 208/3/60 | SPRING HANGERS | 2 | 2,050 | 1, 2, 3, 4, 5 |
| | WINTER | 35 | 30 | 60.5 | 51.2 | 1635 | 1635 | 70 | 58 | 44.2 | 39.2 | 1635 | 1635 | 1.01 | 1.01 | | | | | | | | | | | | | | | | | | | | | | | | | |

1. PROVIDE CONCRETE PAD ON GRADE, DESIGNED BY STRUCTURAL ENGINEER.
2. PROVIDE VFD FOR FAN SPEED CONTROL
3. PROVIDE WETHER PROOF LOCAL DISCONNECT
4. UNIT CONFIGURATION IS SIDE SHOT SUPPLY / RETURN.
5. DOAS UNIT WALLS, ROOF, AND FLOOR SHALL BE DOUBLE-WALL, THERMALLY-BROKEN CONSTRUCTION WITH 2" R13 INSULATION. PROVIDE 2" DOUBLE WALL R13 EQUIVALENT CABINET CONSTRUCTION.-
6. PROVIDE HEAT WHEEL SECTION WITH ACCESS DOOR AND REMOVAL RAIL FOR WHEEL TO BE REMOVED FOR CLEANING.
7. PROVIDE RAIL FOR EASY REMOVAL AND SERVICEABILITY OF FAN ASSEMBLY-
8. FULLY MODULATING HOT GAS REHEAT COIL TO BE INSTALLED ON THE FIRST REFRIGERANT CIRCUIT A MINIMUM OF 6" FROM THE EVAPORATOR COIL.
9. UNIT SHALL BE PROVIDED WITH HOR SUPPLY AND RETURN CONNECTIONS. PLENUM CURB NOT ACCEPTABLE. OR, IF PLENUM CURB PROVIDED, MANUFACTURER SHALL PROVIDE SERVICE ACCESS PLATFORM AROUND THE FULL PERIMETER OF THE UNIT, INSTALLED BY MECHANICAL CONTRACTOR.
10. AC DIRECT DRIVE, OR ECM MOTORS REQUIRED ON ALL SUPPLY AND EXHAUST FANS, BELT DRIVEN FANS ARE UNACCEPTABLE.
11. PROVIDE WITH FULLY MODULATING BURNERS CAPABLE OF 10:1 TURNDOWN. FACTORY WARRANTY OF 25 YEARS ON HEAT EXCHANGER.
12. START UP AND FINAL CHECKOUT TO BE PERFORMED BY A FACTORY AUTHORIZED TECHNICIAN. FACTORY AUTHORIZED TECHNICIAN SHALL ASSIST IN OWNER TRAINING. FACTORY AUTHORIZED TECHNICIAN TO BE AVAILABLE 24/7 FOR SERVICE CALLS.
13. PROVIDE DISCONNECT AND CONVENIENCE OUTLET FROM OEM
14. EXTERIOR CABINET PANELS SHALL BE G-90 GALVANIZED STEEL WITH A WEATHER RESISTANT BAKED ENAMEL FINISH.

## HR BOX SCHEDULE

| TAG | MANUFACTURER | MODEL NUMBER | LOCATION | NUMBER OF BRANCHES | ELECTRICAL | | | | NOTES |
|---|---|---|---|---|---|---|---|---|---|
| | | | | | VOLTS | PHASE | HZ | MCA | |
| BC-1 | MITSUBISHI-TRANE | TCMBM0108 | 1STD FLOOR CEILING | 10 | 208 | 1 | 60 | 0.83 | 1, 2, 3 |
| BC-2 | MITSUBISHI-TRANE | TCMBM0108 | 1STD FLOOR CEILING | 10 | 208 | 1 | 60 | 0.83 | 1, 2, 3 |
| BC-3 | MITSUBISHI-TRANE | TCMBM0108 | 1STD FLOOR CEILING | 10 | 208 | 1 | 60 | 0.83 | 1, 2, 3 |

1. INSTALL PER MANUFACTURER'S RECOMMENDATIONS.
2. PROVIDE LONG RADIUS ELBOWS ON THE REFRIGERANT PIPING.
3. PROVIDE 3/4" CONDENSATE DRAIN AND ROUTE TO NEAREST PLUMBING DRAIN.
4. EACH BRANCH CONTROLLER SHALL BE PROVIDED WITH A FULL PORT BALL VALVE AND SHRAEDER PORT TO BE FIELD INSTALLED. EACH BRANCH DEVICE SHALL HAVE ONE SPARE PORT WITH A CAPPED/CLOSED BALL VALVE FOR FUTURE SERVICE AND EXPANSION, VRF SYSTEMS WITH DISTRIBUTED BRANCH DEVICES SHOULD INCLUDE A SPARE PORT PER BRANCH DEVICE WITH A CAPPED/CLOSED BALL VALVE FOR FUTURE SERVICE AND EXPANSION.
5. ALL BRANCH DEVICES SHALL HAVE BOTTOM ACCESS FOR SERVICE. DEVICES THAT REQUIRE TOP ACCESS SHALL PAY FOR ADDITIONAL GC COSTS TO PROVIDE CEILING OR PLENUM SPACE HEIGHT INCREASE TO MEET THEIR PUBLISHED SERVICE CLEARANCES AND BE CONSIDERED AN ALTERNATE ONLY.
6. ALTERNATE APPROVED VRF MANUFACTURERS SHALL BE RESPONSIBLE FOR ALL COSTS ASSOCIATED WITH ADDITIONAL BRANCH DEVICE QUANTITIES, INCLUDING BUT NOT LIMITED ADDITIONAL ELECTRICAL COSTS, REFRIGERANT EXPANSION JOINTS AND DESIGN, STRUCTURAL CHANGES, AND ADDITIONAL SERVICE/ACCESS PANELS.
7. PROVIDE FULL PORT REFRIGERATION BALL VALVE W/ SHRAEDER RATED AT 700 PSI FIELD INSTALLED. PROVIDE ONE SPARE PORT ON EVERY BRANCH DEVICE WITH A SET OF CAPPED BALL VALVES FOR FUTURE EXPANSION AND SERVICE FLEXIBILITY ON THE SYSTEM.

## FAN SCHEDULE

| MARK NO. | MANUFACTURER | MODEL NUMBER | SERVICE | FUNCTION | DRIVE TYPE | AIRLFLOW (CFM) | ESP (IN W.C.) | ELECTRICAL (MOTOR) | | | | CONTROL | VIBRATION ISOLATION | | OPERATING WEIGHT (LBS) | REMARKS |
|---|---|---|---|---|---|---|---|---|---|---|---|---|---|---|---|---|
| | | | | | | | | HP | V/PH/60 | ECM/VSD/ VFD | FLA | | TYPE | STATIC DEFL. (IN.) | | |
| EF-1 | COOK | 18XW24D17 (VF) | ATTIC | EXHAUST | DIRECT | 1165 | 1.2 | 0.75 | 208/1/60 | ECM/VSD | 3 | THERMOSTAT WITH TIME CLOCK SCHEDULED AFTER HOURS | SPRING HANGERS WITH NEOPREN GROMMETS | NA | 20 | 1, 2, 3 |
| EF-2 | COOK | 100 SQN-D GALV OR70 | MEN'S TOILET | EXHAUST | DIRECT | 277 | 0.6 | 0.33 | 208/1/60 | ECM/VSD | 1.3 | INTERLOCK WITH LIGHTS | SPRING HANGERS WITH NEOPREN GROMMETS | NA | 50 | 1, 2, 3 |
| EF-3 | COOK | 100 SQN-D GALV OR70 | WOMEN'S TOILET | EXHAUST | DIRECT | 277 | 0.6 | 0.33 | 208/1/60 | ECM/VSD | 1.3 | INTERLOCK WITH LIGHTS | SPRING HANGERS WITH NEOPREN GROMMETS | NA | 50 | 1, 2, 3 |
| EF-4 | FANTECH | FG 4XL EC | HANDICAP BATH | EXHAUST | DIRECT | 50 | 0.3 | 7 W | 115/1/60 | ECM/VSD | 0.15 | LIGHT SWITCH | SPRING HANGERS WITH NEOPREN GROMMETS | NA | 5 | 1, 2, 3 |

**NOTES:**
1. PROVIDE LOCAL DISCONNECT.
2. PROVIDE BACKDRAFT DAMPER.
3. PROVIDE DIGITAL 7-DAY TIME CLOCK.

## FIRE SMOKE DAMPER SCHEDULE

| TAG | MANUFACTURER | CONTROL DAMPER | | | | | | NOTES |
|---|---|---|---|---|---|---|---|---|
| | | ACTUATOR | CONTROL | OPEN AND CLOSED END SWITCHES | AUXILIARY SWITCHES | POWER VOLTAGE | CONTROL POWER | |
| FSD | RUSKIN | FAIL-CLOSED, SPRING RETURN | ON/OFF | YES | YES | 24 VAC | 230 VA | 1, 2 |

1. FIRE SMOKE DAMPER TO BE POWERED FROM FIRE ALARM POWER SUPPLY.
2. PROVIDE WITH RESET BUTTON AND OPEN/CLOSED LED LIGHTS.

## (VRF) FAN COIL INDOOR UNIT SCHEDULE - BYRAM ADMIN BLDG

| MARK NO. | SERVICE | MANUFACTURE | MODEL # | TYPE # | from DOSA-1 OSA (CFM) | SA (CFM) | ESP (IN WC) | COOLING CAPACITY (BTU/H) | | COOLING EAT (F) | | COOLING LAT (F) | | HEATING CAPACITY (MBH) | HEATING EAT (F) | HEATING LAT (F) | RFRIGERANT | | | | | | | | ELECTRICAL | | | | | OPER. WT. (LBS) | REMARKS |
|---|---|---|---|---|---|---|---|---|---|---|---|---|---|---|---|---|---|---|---|---|---|---|---|---|---|---|---|---|---|---|---|
| | | | | | | | | TOTAL COOLING -(MBH) | SENS. COOLING- (MBH) | COOLING DB | COOLING WB | COOLING DB | COOLING WB | | | | PIPE LENGTH (FT) | | | | TYPE | CHARGE (LBS) | PIPE SIZE (IN) | | UNIT | | | CONDENSATE PUMP | | | |
| | | | | | | | | | | | | | | | | | HORIZONTAL TO BC-2 (MEN'S TOILET) | HORIZONTAL TO BC-2 TO BC-1 (ATTIC) | HORIZONTAL BC TO INDOOR UNIT | VERTICAL | | | LIQUID | HOT GAS | HEAT RECOVERY | V/PH/Hz | MCA | MOCP | V/PH/Hz | FLA | | |
| AHU-1 | ASSEMBLY RM. 102A | TRANE | TPEFYP072MH140A | HORIZONTAL DUCTED | 192 | 1480 | 0.6 | 61.92 | 52.92 | 80 | 67 | 60.3 | 54 | 44.83 | 70.0 | 86.3 | 64 | NA | 31 | 11 | 410A | | | | YES | 208/1/60 | 7.7 | 15 | 120/160 | 1.6 | 240 | 1, 2, 3 |
| AHU-2B | ASSEMBLY RM. 102B | TRANE | TPEFYP048MA144A | HORIZONTAL DUCTED | 213 | 943 | 0.6 | 42.36 | 22.85 | 74.8 | 68.1 | 58.4 | 54 | 30.26 | 70.0 | 91.5 | 64 | NA | 21 | 16 | 410A | | | | YES | 208/1/60 | 4.38 | 15 | 120/160 | 1.6 | 86 | 1, 2, 3 |
| AHU-2C | ASSEMBLY RM. 102C | TRANE | TPEFYP036MA144A | HORIZONTAL DUCTED | 106 | 883 | 0.6 | 30.96 | 26.46 | 80 | 67 | 60.3 | 54 | 22.41 | 70.0 | 86.3 | 64 | NA | 21 | 11 | 410A | | | | YES | 208/1/60 | 4.25 | 15 | 120/160 | 1.6 | 69 | 1, 2, 3 |
| AHU-3 | CONFERENCE RM 106 | TRANE | TPEFYP048MA144A | HORIZONTAL DUCTED | 95.30 | 1293 | 0.6 | 41.28 | 30.86 | 80 | 67 | 57.7 | 54 | 30.26 | 70.0 | 91.5 | 64 | NA | 32 | 11 | 410A | | | | YES | 208/1/60 | 4.38 | 15 | 120/160 | 1.6 | 86 | 1, 2, 3 |
| | | | | | | | | | | | | | | | | | | | | | | | | | | | | | | | | |
| AHU-5 | WOMEN'S 107, MEN'S 108 | TRANE | TPEFYP015MA144A | HORIZONTAL DUCTED | 494.00 | 494 | 0.6 | 12.90 | 10.55 | 80 | 67 | 59.8 | 54 | 9.53 | 70.0 | 87.9 | 64 | NA | 28 | 11 | 410A | | | | YES | 208/1/60 | 2.88 | 15 | 120/160 | 1.6 | 51 | 1, 2, 3 |
| AHU-6-8 | HALL 101 | TRANE | TPEFYP036MA144A | HORIZONTAL DUCTED | 21.17 | 1060 | 0.6 | 30.96 | 26.46 | 80 | 67 | 60.3 | 54 | 22.41 | 70.0 | 86.3 | 64 | NA | 24 | 11 | 410A | | | | YES | 208/1/60 | 4.25 | 15 | 120/160 | 1.6 | 69 | 1, 2, 3 |
| AHU-7 | OFFICE 110 | TRANE | TPEFYP018MA144A | HORIZONTAL DUCTED | 15.88 | 300 | 0.6 | 15.48 | 12.74 | 80 | 67 | 59.9 | 54 | 11.21 | 70.0 | 87.3 | 64 | NA | 44 | 11 | 410A | | | | YES | 208/1/60 | 2.94 | 15 | 120/160 | 1.6 | 30 | 1, 2, 3 |
| AHU-9 | OFFICES 113A | TRANE | TPEFYP024MA144A | HORIZONTAL DUCTED | 31.77 | 676 | 0.6 | 20.64 | 17.94 | 80 | 67 | 60.8 | 54 | 15.13 | 70.0 | 85.9 | 64 | NA | 66 | 11 | 410A | | | | YES | 208/1/60 | 2.88 | 15 | 120/160 | 1.6 | 58 | 1, 2, 3 |
| AHU-10 | OFFICES 113B | TRANE | TPEFYP024MA144A | HORIZONTAL DUCTED | 42.36 | 660 | 0.6 | 20.64 | 17.94 | 80 | 67 | 60.8 | 54 | 15.13 | 70.0 | 85.9 | 64 | NA | 77 | 11 | 410A | | | | YES | 208/1/60 | 2.88 | 15 | 120/160 | 1.6 | 58 | 1, 2, 3 |
| AHU-11 | OFFICE 112A, 115, 116 | TRANE | TPEFYP036MA144A | HORIZONTAL DUCTED | 37.06 | 1083 | 0.6 | 30.96 | 26.46 | 80 | 67 | 60.3 | 54 | 22.41 | 70.0 | 86.3 | 64 | NA | 75 | 11 | 410A | | | | YES | 208/1/60 | 4.25 | 15 | 120/160 | 1.6 | 69 | 1, 2, 3 |
| AHU-12 | OFFICE 114 | TRANE | TPEFYP018MA144A | HORIZONTAL DUCTED | 42.12 | 525 | 0.6 | 16.18 | 13.0067 | 80 | 67 | 59.5 | 54 | 12.21 | 70.0 | 88.9 | 64 | NA | 94 | 11 | 410A | | | | YES | 208/1/60 | 2.94 | 15 | 120/160 | 1.6 | 30 | 1, 2, 3 |
| AHU-13-4 | KITCHEN 111 AND STORAGE 109 | TRANE | TPEFYP030MA144A | HORIZONTAL DUCTED | 66 | 765 | 0.6 | 26.18 | 16.0067 | 80 | 67 | 59.5 | 54 | 15.21 | 70.0 | 88.9 | 64 | NA | 82 | 11 | 410A | | | | YES | 208/1/60 | 3.6 | 15 | 120/160 | 1.6 | 30 | 1, 2, 3 |
| AHU-14 | BULL PEN 112 | TRANE | TPEFYP018MA144A | HORIZONTAL DUCTED | 5.26 | 673 | 0.6 | 16.18 | 13.0067 | 80 | 67 | 59.5 | 54 | 12.21 | 70.0 | 88.9 | 64 | NA | 46 | 11 | 410A | | | | YES | 208/1/60 | 2.94 | 15 | 120/160 | 1.6 | 30 | 1, 2, 3 |
| AHU-16 | ATTIC 200A | TRANE | TPEFYP072MH140A | HORIZONTAL DUCTED | 103.00 | 1483 | 0.6 | 64.72 | 53.9837 | 80 | 67 | 59.9 | 54 | 48.83 | 70.0 | 87.8 | 64 | 15 | 61 | 23 | 410A | | | | YES | 208/1/60 | 7.7 | 15 | 120/160 | 1.6 | 240 | 1, 2, 3 |
| AHU-17A | ATTIC 200B | TRANE | TPEFYP036MA144A | HORIZONTAL DUCTED | 64.00 | 1030 | 0.6 | 32.36 | 26.9919 | 80 | 67 | 59.9 | 54 | 24.42 | 70.0 | 87.8 | 64 | 15 | 52 | 23 | 410A | | | | YES | 208/1/60 | 4.25 | 15 | 120/160 | 1.6 | 69 | 1, 2, 3 |
| AHU-17B | ATTIC 200C | TRANE | TPEFYP036MA144A | HORIZONTAL DUCTED | 64.00 | 1030 | 0.6 | 32.36 | 26.9919 | 80 | 67 | 59.9 | 54 | 24.42 | 70.0 | 87.8 | 64 | 15 | 31 | 23 | 410A | | | | YES | 208/1/60 | 4.25 | 15 | 120/160 | 1.6 | 69 | 1, 2, 3 |

1. INSTALLATION AND MINIMUM CLEARANCES SHALL BE PER MANUFACTURER'S RECOMMENDATIONS.
2. PROVIDE ALL REFRIGERANT PIPING, VALVES, Y-BRANCHES, HEADERS, FITTINGS AND SPECIALITIES.
3. PROVIDE CONDENSATE PUMP HARTEL K-20, 120/1/60, 1.7 A, ABOVE THE CEILING NEXT TO THE UNIT.
4. POWER LOSS TO ONE INDOOR UNIT WILL NOT CAUSE SYSTEM SHUTDOWN AND THE SYSTEM WILL CONTINUE TO OPERATE NORMALLY.

## VRF HVAC AIR COOLED CONDENSING UNIT SCHEDULE

| TAG | SERVICE | MANUFACTURER | MODEL | TOTAL COOLING CAPACITY MBH | TOTAL HEATING CAPACITY MBH | ELECTRICAL SECTION | | | | | | | MISCELLANEOUS SECTION | | | NOTES |
|---|---|---|---|---|---|---|---|---|---|---|---|---|---|---|---|---|
| | | | | | | VOLTAGE | PHASE | MINIMUM CIRCUIT AMP | MAXIMUM OVERCURRENT PROTECTION | FLA | MAX FUSE | AFC RATING | WEIGHT | REFRIGERANT USED | EFFICIENCY SEER/EER/HSPF/ COP/AFUE% | |
| CU-1 | INDOOR UNITS | TRANE | TURYH192 (TWIN UNIT) | 96 | 108 | 208 | 3 | 44 | 70 | _ | _ | | 662 | R410A | 10/20.8 | 1, 2, 3, 4, 5, 6, 7 |
| CU-2 | INDOOR UNITS | TRANE | TURYH192 (TWIN UNIT) | 96 | 108 | 208 | 3 | 44 | 70 | _ | _ | | 662 | R410A | 10/20.8 | 1, 2, 3, 4, 5, 6, 7 |
| CU-3 | INDOOR UNITS | TRANE | TURYH192 (TWIN UNIT) | 96 | 108 | 208 | 3 | 44 | 70 | _ | _ | | 662 | R410A | 10/20.8 | 1, 2, 3, 4, 5, 6, 7 |
| CU-4 | INDOOR UNITS | TRANE | TURYH192 (TWIN UNIT) | 96 | 108 | 208 | 3 | 44 | 70 | _ | _ | | 662 | R410A | 10/20.8 | 1, 2, 3, 4, 5, 6, 7 |
| CU-5 | INDOOR UNITS | TRANE | TURYH144 (TWIN UNIT) | 72 | 80 | 208 | 3 | 38 | 60 | _ | _ | | 644 | R410A | 10/20.8 | 1, 2, 3, 4, 5, 6, 7 |
| CU-6 | INDOOR UNITS | TRANE | TURYH144 (TWIN UNIT) | 72 | 80 | 208 | 3 | 38 | 60 | _ | _ | | 644 | R410A | 10/20.8 | 1, 2, 3, 4, 5, 6, 7 |

1. PROVIDE HIGH HEAT CONDENSING UNITS AND HEAT RECOVERY.
2. PROVIDE WITH ANTI-SHORT CYCLE TIMER, DISCONNECT SWITCH.
3. POSITIVELY ATTACH THE UNIT TO CONCRETE PAD. COORDINATE WITH THE ARCHITECT AND/OR STRUCTURAL ENGINEER.
4. PROVIDE AT LEAST 18" OF STRAIGHT PIPE AT UNIT PIPING CONNECTIONS.
5. PROVIDE PIPING WITH LONG RADIUS ELBOWS AND "Y" FITTINGS PER MANUFACTURER'S RECOMMENDATIONS.
6. PROVIDE 1/4" NEOPRENE PADS AT ATTACHMENT POINTS UNDER THE UNIT MOUNTING BRACKET.
7. PROVIDE WEATHER PROOF LOCAL UNIT DISCONNECT.

## HVAC ELECTRIC BASEBOARD SCHEDULE

| TAG | SERVICE | MANUFACTURER | MODEL | ELECTRICAL SECTION | | | | | | | LENGTH (FT) | NOTES |
|---|---|---|---|---|---|---|---|---|---|---|---|---|
| | | | | KW | OUTPUT MBH | AMPS | VOLTAGE | PHASE | CONTROL | AFC RATING | | |
| EBB-1 | STAIR | BERKO | BKOC2504W | 1 | 3.4 | 4.8 | 208 | 1 | THERMOSTAT | | 4 | 1, 2 |

1. INTEGRAL THERMOSTAT.
2. PROVIDE LOCAL DISCONNECT.

## CONDENSING UNIT SCHEDULE

| MARK NO. | MANUFACTURER | MODEL NUMBER | LOCATION | COOLING CAPACITY (MBTU/H) | | | OUTDOOR TEMPERATURE (F) | | | EFFICIENCY | | REFRIG. | | ELECTRICAL | | | | | OPER. WT. (LBS) | ISOLATOR DATA | | REMARKS |
|---|---|---|---|---|---|---|---|---|---|---|---|---|---|---|---|---|---|---|---|---|---|---|
| | | | | NOMINAL TONS | TOTAL COOLING | HEATING | COOLING DB | COOLING WB | HEATING DB | SEER | HSPF | TYPE | LBS | VOLTS | PHASE | HZ | MCA | MOCP | | MANUF. & MODEL # | STATIC DEFL. (IN) | |
| CU-15 | MITSUBISHI-TRANE | TRUYA024 | GRADE | 2 | 24 | __ | 95 | 74 | __ | 14.7 | __ | R410A | __ | 208 | 1 | 60 | 19 | 26 | 165 | 1/8" NEOPRENE WAFFLE PADS | -- | |

1. PROVIDE LOW AMBIANT KIT.
2. PROVIDE WITH ANTI-SHORT CYCLE TIMER, DISCONNECT SWITCH.
3. POSITIVELY ATTACH THE UNIT TO PAD ON GRADE. COORDINATE WITH THE ARCHITECT AND/OR STRUCTURAL ENGINEER.
4. PROVIDE AT LEAST 18" OF STRAIGHT PIPE AT UNIT PIPING CONNECTIONS.
5. PROVIDE PIPING WITH LONG RADIUS ELBOWS PER MANUFACTURER'S RECOMMENDATIONS.
6. PROVIDE 1/8" NEOPRENE PADS AT ATTACHMENT POINTS UNDER THE UNIT MOUNTING BRACKET.
7. PROVIDE WEATHER PROOF LOCAL UNIT DISCONNECT.

## HVAC ELECTRIC UNIT SCHEDULE

| TAG | SERVICE | MANUFACTURER | MODEL | ELECTRICAL SECTION | | | | | | | WEIGHT (LBS) | NOTES |
|---|---|---|---|---|---|---|---|---|---|---|---|---|
| | | | | KW | OUTPUT MBH | AMPS | VOLTAGE | PHASE | CONTROL | AFC RATING | | |
| EUH-1 | ENTRANCE | BERKO | QFF4008 | 2 | 6.8 | 9.8 | 208 | 1 | THERMOSTAT | | 25 | 1 |

1. INTEGRAL THERMOSTAT.
2. PROVIDE LOCAL DISCONNECT.

## FAN COIL INDOOR UNIT SCHEDULE -(SERVER ROOM)

| MARK NO. | MANUFACTURE | MODEL NUMBER | SERVICE | CU OUTDOOR UNIT | OSA (CFM) | SA (CFM) | ESP (IN WC) | COOLING CAPACITY (BTU/H) | | COOLING EAT (F) | | COOLING LAT (F) | | HEATING CAPACITY (BTU/H) | HEATING EAT (F) | HEATING LAT (F) | RFRIGERANT | | | | ELECTRICAL | | | | | OPER. WT. (LBS) | REMARKS |
|---|---|---|---|---|---|---|---|---|---|---|---|---|---|---|---|---|---|---|---|---|---|---|---|---|---|---|---|
| | | | | | | | | CALC. TOTAL COOLING -(TONS) | TOTAL COOLING -(MBH) | COOLING DB | COOLING WB | COOLING DB | COOLING WB | | | | TYPE | CHARGE (LBS) | PIPE LENGTH (FT) | | UNIT | | | CONDENSATE PUMP | | | |
| | | | | | | | | | | | | | | | | | | | HORIZONTAL | VERTICAL | V/PH/Hz | RLA | MCA | V/PH/Hz | FLA | | |
| AHU-15 | MITSUBISHI-TRANE | TPLA0A024 | SERVER ROOM | CU-15 | 5 | 800 | 0.2 | 2.00 | 24.00 | 80 | 67 | 55 | 54 | __ | __ | __ | 410A | __ | 57 | 7 | 208/1/60 | - | 1 | 120/1/60 | 1.7 | 60 | 1, 2, 3, 4 |

1. INSTALL PER MANUFACTURER'S RECOMMENDATIONS.
2. PROVIDE LONG RADIUS ELBOWS ON THE REFRIGERANT PIPING.
3. PROVIDE CONDENSATE PUMP HARTEL K-20, 120/1/60, 1.7 A, ABOVE THE CEILING NEXT TO THE UNIT.
4. POWERED BY OUTDOOR UNIT.

BYRAM MUNCIPAL BUILDING
ADMINISTRATIVE / CIVIL
10 MANSFIELD DRIVE
LOTS 16.01 - BLOCK 365
BYRAM TOWNSHIP
SUSSEX COUNTY, NEW JERSEY


THE NADER GROUP, LLC
Architects, Engineers, & Surveyors
111 Mill Street
Hackettstown, NJ 07840
p.908.850.3500 | f.908.441.5803
e. wassim.nader@thenadergroup.com
www.naderhouseofdesign.com


BRIAN D. TANNENHAUS

ISSUED FOR BID
NOT FOR CONSTRUCTION
08/01/2023

NJ PROFESSIONAL ENGINEER
NO. GE 45801

DATE: XX/XX/XXXX


BD engineering
NJ CERTIFICATE OF AUTHORIZATION – 24GA28116100
BD Engineering, LLC
44 Main Street, Farmingdale, NJ 07727
www.bd-engineering.com Project No. 210133


| No. | DATE | REVISION |
|---|---|---|
| 00 | 08/01/23 | BID SET |

DRW BY: DRAWNBY
SCALE: AS NOTED
DATE: JUNE 16, 2023
JOB No. 18.TNG029
DRAWING Name
HVAC SCHEDULE SHEET
DRAWING No.
M-300

8/4/2023 3:59 PM

| | | |
|---|---|---|
| Indoor Units: | 6 / 1 to 48 | |
| Capacity: | 210 / 96 to 288 (109.4%) | |
| * Connectable capacity is not actual capacity. | | |
| Total Pipe Length: | 558.2 / 1936.5 | feet |
| Furthest Actual: | 169.0 / 541.0 | feet |
| Furthest Equiv.: | 178.8 / 623.0 | feet |
| Furthest IU from BC Actual: | 105.0 / 131.0 | feet |
| Furthest IU from BC Equiv.: | 108.3 / 131.0 | feet |
| Furthest IU from BC Thru Sub BC Actual: | 0.0 / 0.0 | feet |
| Furthest IU from BC Thru Sub BC Equiv.: | 0.0 / 0.0 | feet |

**Correction Factors**

| | | |
|---|---|---|
| Outdoor Unit Capacity: | 1.02 | 1.00 |
| Temperature: | 1.00 | 0.73 |
| Piping Length: | 0.92 | 0.97 |
| Defrosting: | - | 0.95 |
| User Derate: | 1.00 | 1.00 |
| Total Derate: | 0.94 | 0.67 |
| Additional Refrigerant: | 40.33 lb | |
| Total Refrigerant Amount: | 87.95 lb | |

**Conditions** (°F)

Cooling
Indoor DB 80.0 Humidity 51.8% Indoor WB 67.0
Outdoor DB 95.0

Heating
Indoor DB 70.0
Outdoor DB 10.0 Humidity 68.0% Outdoor WB 8.6

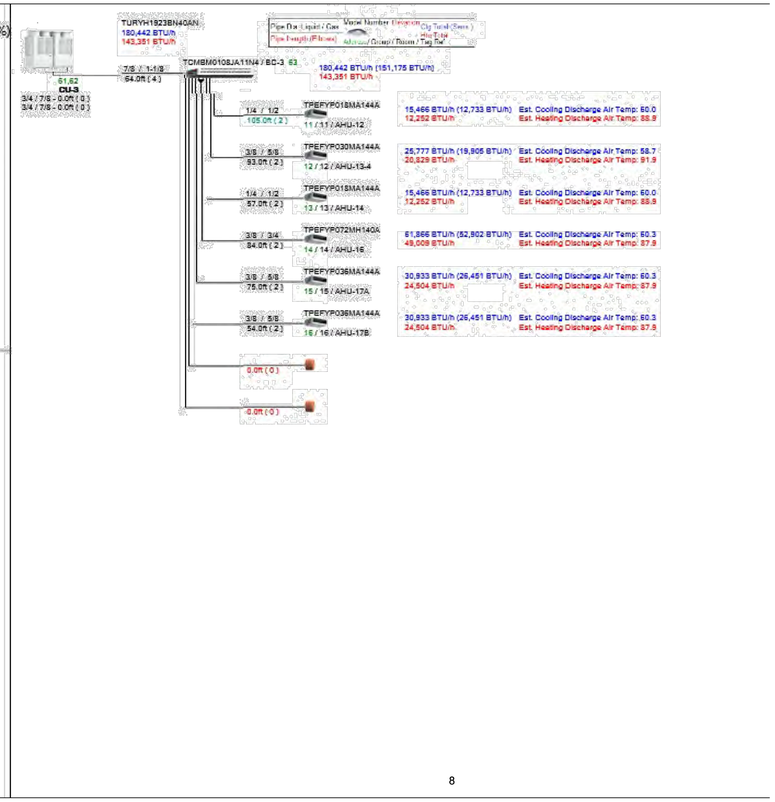


8

| | | |
|---|---|---|
| Indoor Units: | 4 / 1 to 48 | |
| Capacity: | 204 / 96 to 288 (106.3%) | |
| * Connectable capacity is not actual capacity. | | |
| Total Pipe Length: | 227.1 / 1940.5 | feet |
| Furthest Actual: | 103.0 / 541.0 | feet |
| Furthest Equiv.: | 106.3 / 623.0 | feet |
| Furthest IU from BC Actual: | 43.0 / 131.0 | feet |
| Furthest IU from BC Equiv.: | 46.3 / 131.0 | feet |
| Furthest IU from BC Thru Sub BC Actual: | 0.0 / 0.0 | feet |
| Furthest IU from BC Thru Sub BC Equiv.: | 0.0 / 0.0 | feet |

**Correction Factors**

| | | |
|---|---|---|
| Outdoor Unit Capacity: | 1.01 | 1.00 |
| Temperature: | 1.00 | 0.73 |
| Piping Length: | 0.96 | 0.98 |
| Defrosting: | - | 0.95 |
| User Derate: | 1.00 | 1.00 |
| Total Derate: | 0.97 | 0.68 |
| Additional Refrigerant: | 31.83 lb | |
| Total Refrigerant Amount: | 79.45 lb | |

**Conditions** (°F)

Cooling
Indoor DB 80.0 Humidity 51.8% Indoor WB 67.0
Outdoor DB 95.0

Heating
Indoor DB 70.0
Outdoor DB 10.0 Humidity 68.0% Outdoor WB 8.6

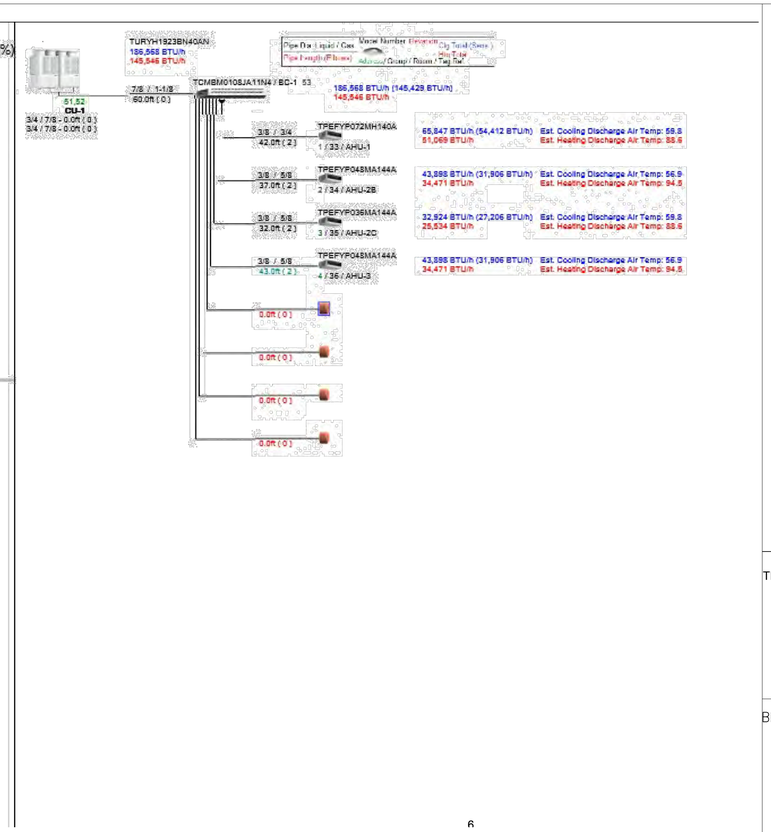


6

| | | |
|---|---|---|
| Indoor Units: | 6 / 1 to 36 | |
| Capacity: | 153 / 72 to 216 (106.3%) | |
| * Connectable capacity is not actual capacity. | | |
| Total Pipe Length: | 469.5 / 1898.5 | feet |
| Furthest Actual: | 148.0 / 541.0 | feet |
| Furthest Equiv.: | 161.1 / 623.0 | feet |
| Furthest IU from BC Actual: | 88.0 / 131.0 | feet |
| Furthest IU from BC Equiv.: | 91.3 / 131.0 | feet |
| Furthest IU from BC Thru Sub BC Actual: | 0.0 / 0.0 | feet |
| Furthest IU from BC Thru Sub BC Equiv.: | 0.0 / 0.0 | feet |

**Correction Factors**

| | | |
|---|---|---|
| Outdoor Unit Capacity: | 1.02 | 1.00 |
| Temperature: | 1.00 | 0.73 |
| Piping Length: | 0.94 | 0.97 |
| Defrosting: | - | 0.95 |
| User Derate: | 1.00 | 1.00 |
| Total Derate: | 0.96 | 0.67 |
| Additional Refrigerant: | 36.92 lb | |
| Total Refrigerant Amount: | 72.20 lb | |

**Conditions** (°F)

Cooling
Indoor DB 80.0 Humidity 51.8% Indoor WB 67.0
Outdoor DB 95.0

Heating
Indoor DB 70.0
Outdoor DB 10.0 Humidity 68.0% Outdoor WB 8.6

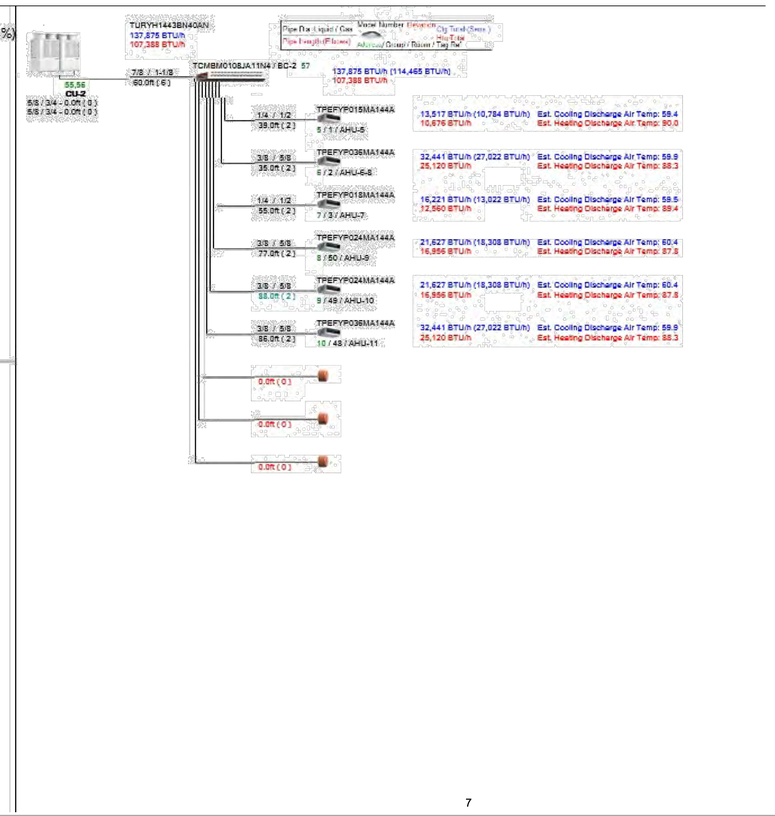


7

THESE DETAILS ARE PROVIDED FOR DIAGRAMMATIC PURPOSES ONLY. REFER TO THE MANUFACTURES SHOP DRAWINGS, DETAILS AND INSTALLATION INSTRUCTIONS FOR FINAL REQUIREMENTS.

| | | |
|---|---|---|
| Indoor Units: | 6 / 1 to 36 | |
| Capacity: | 153 / 72 to 216 (106.3%) | |
| * Connectable capacity is not actual capacity. | | |
| Total Pipe Length: | 469.5 / 1898.5 | feet |
| Furthest Actual: | 148.0 / 541.0 | feet |
| Furthest Equiv.: | 161.1 / 623.0 | feet |
| Furthest IU from BC Actual: | 88.0 / 131.0 | feet |
| Furthest IU from BC Equiv.: | 91.3 / 131.0 | feet |
| Furthest IU from BC Thru Sub BC Actual: | 0.0 / 0.0 | feet |
| Furthest IU from BC Thru Sub BC Equiv.: | 0.0 / 0.0 | feet |

**Correction Factors**

| | | |
|---|---|---|
| Outdoor Unit Capacity: | 1.02 | 1.00 |
| Temperature: | 1.00 | 0.73 |
| Piping Length: | 0.94 | 0.97 |
| Defrosting: | - | 0.95 |
| User Derate: | 1.00 | 1.00 |
| Total Derate: | 0.96 | 0.67 |
| Additional Refrigerant: | 36.92 lb | |
| Total Refrigerant Amount: | 72.20 lb | |

**Conditions** (°F)

Cooling
Indoor DB 80.0 Humidity 51.8% Indoor WB 67.0
Outdoor DB 95.0

Heating
Indoor DB 70.0
Outdoor DB 10.0 Humidity 68.0% Outdoor WB 8.6

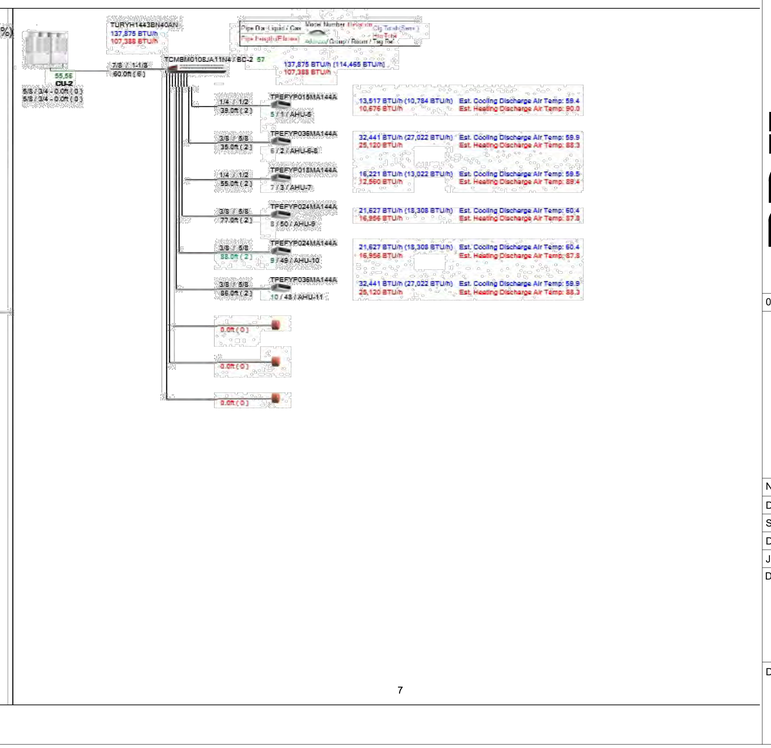


7

BYRAM MUNCIPAL BUILDING
ADMINISTRATIVE / CIVIL
10 MANSFIELD DRIVE
LOTS 16.01 - BLOCK 365
BYRAM TOWNSHIP
SUSSEX COUNTY, NEW JERSEY


THE NADER GROUP, LLC
Architects, Engineers, & Surveyors
111 Mill Street
Hackettstown, NJ 07840
p.908.850.3500 | f.908.441.5803
e. wassim.nader@thenadergroup.com
www.naderhouseofdesign.com

BRIAN D. TANNENHAUS


ISSUED FOR BID
NOT FOR CONSTRUCTION
08/01/2023

NJ PROFESSIONAL ENGINEER
NO. GE 45801

DATE: XX/XX/XXXX


BDI engineering
NJ CERTIFICATE OF AUTHORIZATION – 24GA28116100
BD Engineering, LLC 732-886-5432
44 Main Street, Farmingdale, NJ 07727
www.bdi-engineering.com Project No. 210133


| No. | DATE | REVISION |
|---|---|---|
| 00 | 08/01/23 | BID SET |

DRW BY: DRAWNBY
SCALE: AS NOTED
DATE: JUNE 16, 2023
JOB No. 18.TNG029
DRAWING Name

REFRIGERANT
PIPING DIAGRAMS

DRAWING No.

M-301

8/4/2023 3:59 PM

| MINIMUM CONDENSATE PIPE SIZES | |
|---|---|
| TONS OF COOLING | MIN DRAIN SIZE |
| 0-20 | 1" |
| 21-40 | 1-1/4" |
| 41-60 | 1-1/2" |
| 61-100 | 2" |
| 100-250 | 3" |
| 250 AND LARGER | 4" |

## HVAC UNIT CONDENSATE PIPING SIZING CHART

SCALE: NONE

| RECTANGULAR DUCT HANGER SCHEDULE (MINIMUM SIZES) | | | | | | | | |
|---|---|---|---|---|---|---|---|---|
| HALF DUCT PERIMETER RANGE | PAIR AT 10' SPACING | | PAIR AT 6' SPACING | | PAIR AT 5' SPACING | | PAIR AT 4' SPACING | |
| | STRAP | WIRE/ROD | STRAP | WIRE/ROD | STRAP | WIRE/ROD | STRAP | WIRE/ROD |
| P/2 < 30" | 1"x 22 GA. | 10 GA. (0.135") | 1"x 22 GA. | 10 GA. (0.135") | 1"x 22 GA. | 12 GA. (0.106") | 1"x 22 GA. | 12 GA. (0.106") |
| P/2 < 72" | 1"x 18 GA. | 3/8" | 1"x 20 GA. | 1/4" | 1"x 22 GA. | 1/4" | 1"x 22 GA. | 1/4" |
| P/2 < 96" | 1"x 16 GA. | 3/8" | 1"x 18 GA. | 3/8" | 1"x 20 GA. | 3/8" | 1"x 22 GA. | 1/4" |
| P/2 < 120" | 1-1/2"x 16 GA. | 1/2" | 1"x 16 GA. | 3/8" | 1"x 18 GA. | 3/8" | 1"x 20 GA. | 1/4" |
| P/2 < 168" | 1-1/2"x 16 GA. | 1/2" | 1"x 16 GA. | 1/2" | 1"x 16 GA. | 3/8" | 1"x 18 GA. | 3/8" |
| P/2 < 192" | - | 1/2" | 1-1/2"x 16 GA. | 1/2" | 1"x 16 GA. | 3/8" | 1"x 16 GA. | 3/8" |
| | | | | | | | | |

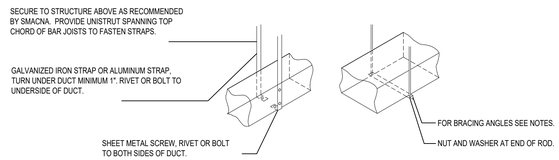


## DUCT HANGER DETAILS

SCALE: NONE

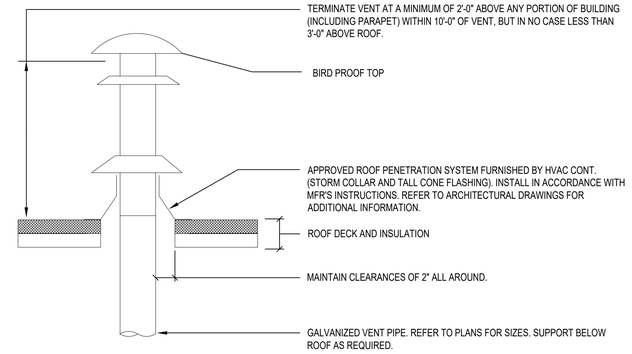


## AIR EXHAUST VENT DETAIL

SCALE: NONE

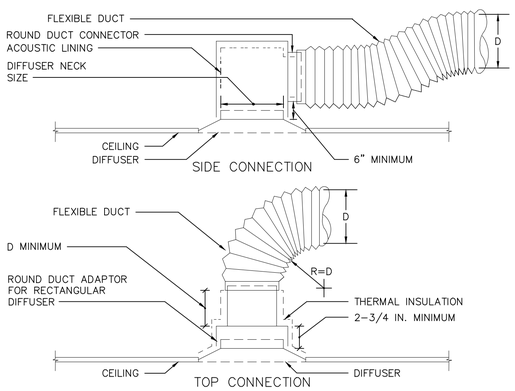


NOTE: MAXIMUM FLEXIBLE DUCT LENGTH IS 5'-0". PROVIDE HARD DUCT AS REQUIRED TO NOT EXCEED THIS MAXIMUM FLEX DUCT LENGTH

## DIFFUSER CONNECTION DETAIL

SCALE: NONE

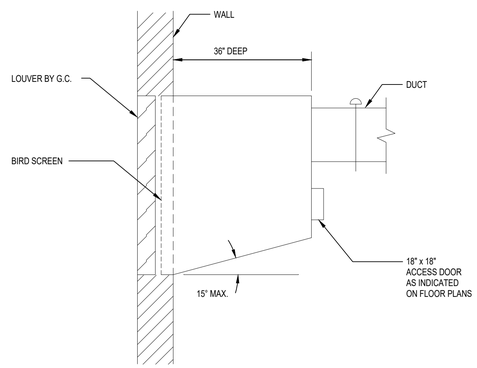


NOTES:

1. PLENUM SIZE TO MATCH LOUVER.
2. SEAL ALL PLENUM SEALS WATERTIGHT WITH SILICONE SEALANT.
3. TYPICAL FOR SUPPLY AND EXHAUST PLENUMS.

## LOUVER PLENUM INSTALLATION DETAIL

SCALE: NONE

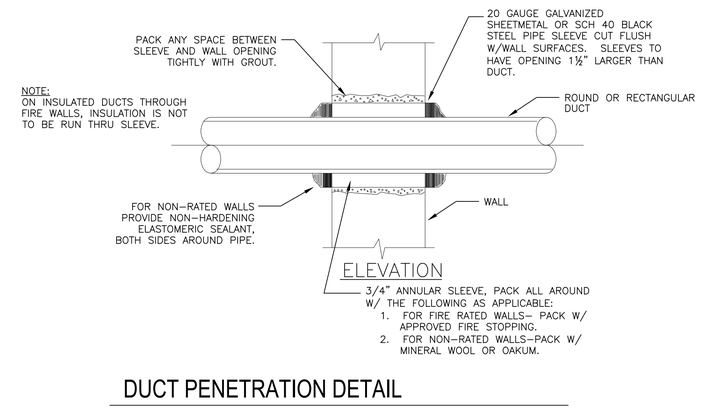


NOTE:
ON INSULATED DUCTS THROUGH FIRE WALLS, INSULATION IS NOT TO BE RUN THRU SLEEVE.

## DUCT PENETRATION DETAIL

SCALE: NONE

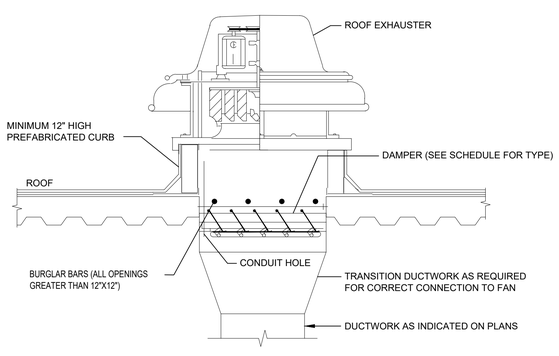


## EXHAUST FAN DETAIL

SCALE: NONE

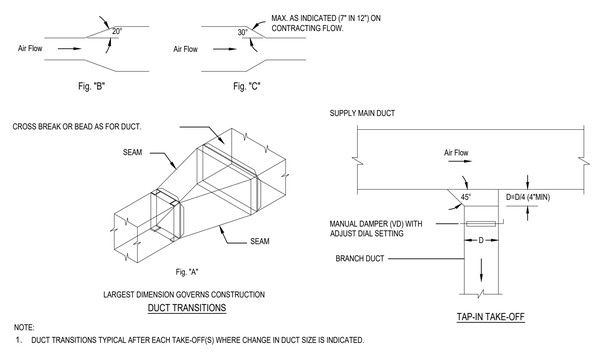


NOTE:

1. DUCT TRANSITIONS TYPICAL AFTER EACH TAKE-OFF(S) WHERE CHANGE IN DUCT SIZE IS INDICATED.

## DUCT TRANSITION DETAILS

SCALE: NONE

DOAS NOTES

1. DOAS UNIT WALLS, ROOF, AND FLOOR SHALL BE DOUBLE-WALL, THERMALLY-BROKEN CONSTRUCTION WITH 2" R13 INSULATION. PROVIDE 2" DOUBLE WALL R13 EQUIVALENT CABINET CONSTRUCTION.
2. PROVIDE HEAT WHEEL SECTION WITH ACCESS DOOR AND REMOVAL RAIL FOR WHEEL TO BE REMOVED FOR CLEANING.
3. PROVIDE RAIL FOR EASY REMOVAL AND SERVICEABILITY OF FAN ASSEMBLY
4. FULLY MODULATING HOT GAS REHEAT COIL TO BE INSTALLED ON THE FIRST REFRIGERANT CIRCUIT A MINIMUM OF 6" FROM THE EVAPORATOR COIL.
5. UNIT SHALL BE PROVIDED WITH HOR SUPPLY AND RETURN CONNECTIONS
6. PLENUM CURB NOT ACCEPTABLE. OR. IF PLENUM CURB PROVIDED, MANUFACTURER SHALL PROVIDE SERVICE ACCESS PLATFORM AROUND THE FULL PERIMETER OF THE UNIT, INSTALLED BY MECHANICAL CONTRACTOR.
7. AC DIRECT DRIVE, OR ECM MOTORS REQUIRED ON ALL SUPPLY AND EXHAUST FANS, BELT DRIVEN FANS ARE UNACCEPTABLE.
8. START UP AND FINAL CHECKOUT TO BE PERFORMED BY A FACTORY AUTHORIZED TECHNICIAN. FACTORY AUTHORIZED TECHNICIAN SHALL ASSIST IN OWNER TRAINING. FACTORY AUTHORIZED TECHNICIAN TO BE AVAILABLE 24/7 FOR SERVICE CALLS.
9. PROVIDE DISCONNECT AND CONVENIENCE OUTLET FROM OEM
10. EXTERIOR CABINET PANELS SHALL BE G-90 GALVANIZED STEEL WITH A WEATHER RESISTANT BAKED ENAMEL FINISH.

BYRAM MUNCIPAL BUILDING
ADMINISTRATIVE / CIVIL
10 MANSFIELD DRIVE,
LOTS 16.01 - BLOCK 365
BYRAM TOWNSHIP
SUSSEX COUNTY, NEW JERSEY


THE NADER GROUP, LLC
Architects, Engineers, & Surveyors
111 Mill Street
Hackettstown, NJ 07840
p.908.850.3500 | f.908.441.5803
e. wassim.nader@thenadergroup.com
www.naderhouseofdesign.com

BRIAN D. TANNENHAUS


ISSUED FOR BID
NOT FOR CONSTRUCTION
08/01/2023

NJ PROFESSIONAL ENGINEER
NO. GE 45801

DATE: XX/XX/XXXX


BD engineering
NJ CERTIFICATE OF AUTHORIZATION - 24GA28116100
BD Engineering, LLC
44 Main Street, Farmingdale, NJ 07727
732-886-5432
www.bd-engineering.com Project No. 210133


| No. | DATE | REVISION |
|---|---|---|
| 00 | 08/01/23 | BID SET |

DRW BY: DRAWNBY
SCALE: AS NOTED
DATE: JUNE 16, 2023
JOB No. 18.TNG029
DRAWING Name
HVAC DETAILS
DRAWING No.
M-302

8/4/2023 3:58 PM

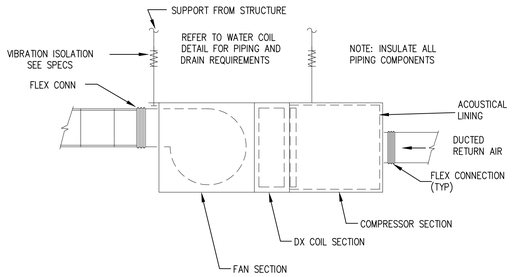


## TYPICAL HEAT PUMP UNIT DETAIL

SCALE: NONE

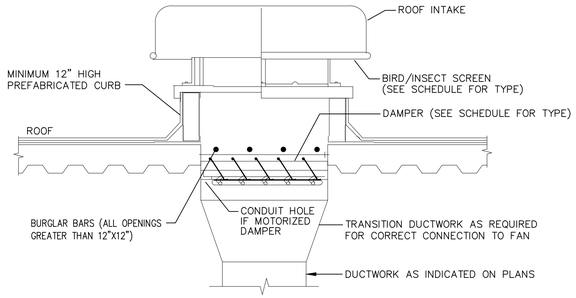


## ROOFTOP INTAKE DETAIL

SCALE: NONE

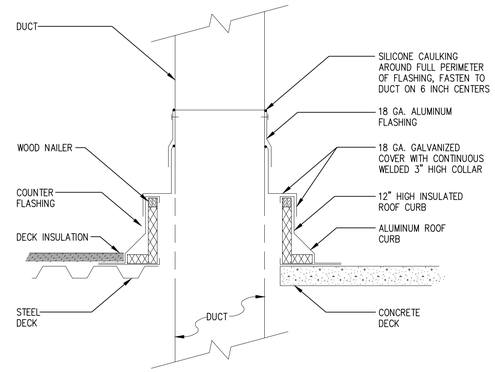


NOTES:
1. COORDINATE CURB STEP HEIGHT WITH ROOF DECK INSULATION THICKNESS

## DUCT PENETRATION THROUGH ROOF DETAIL

SCALE: NONE

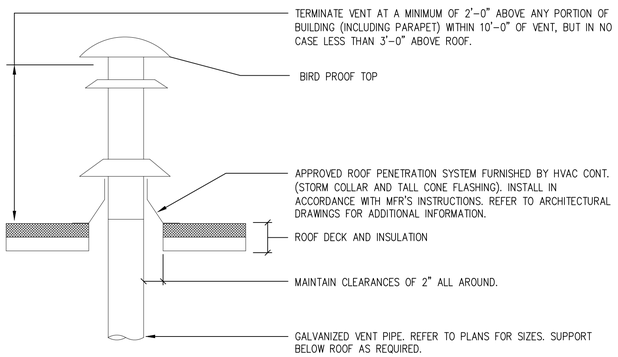


## AIR EXHAUST VENT DETAIL

SCALE: NONE

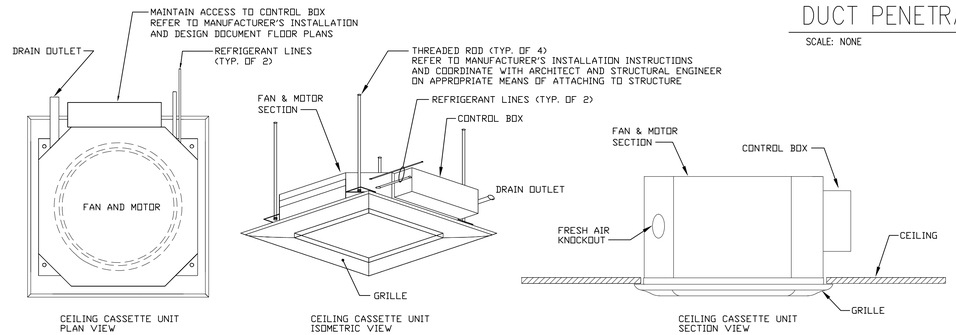


## CEILING CASSETTE UNIT DETAIL

SCALE: NONE

### DIFFUSER, REGISTER, AND GRILLE SCHEDULE

| TAG | MANUFACTURER & MODEL NUMBER | TYPE | SERVICE | LOCATION | OVERALL DIMENSION | NECK SIZE | MAX N.C. | MAX S.P. | NOTES |
|---|---|---|---|---|---|---|---|---|---|
| CD-1 | TITUS OMNI | PLAQUE FACE | SUPPLY | SEE PLANS | 24x24 | 12 | 25 | 0.1 | |
| CD-2 | TITUS OMNI | PLAQUE FACE | SUPPLY | SEE PLANS | 24x24 | 10 | 25 | 0.1 | |
| CD-3 | TITUS OMNI | PLAQUE FACE | SUPPLY | SEE PLANS | 24x24 | 8 | 25 | 0.1 | |
| CD-4 | TITUS 272RL | LOUVERED FACE | SUPPLY | SEE PLANS | 24x24 | 12x12 | 25 | 0.1 | |
| CD-5 | TITUS OMNI | PLAQUE FACE | SUPPLY | SEE PLANS | 24x24 | 10 | 25 | 0.1 | |
| CD-6 | TITUS OMNI | PLAQUE FACE | SUPPLY | SEE PLANS | 24x24 | 8 | 25 | 0.1 | |
| CD-7 | TITUS 272RL | LOUVERED FACE | SUPPLY | SEE PLANS | 24x10 | 24x10 | 25 | 0.1 | |
| RG-1 | TITUS OMNI | PLAQUE FACE | RETURN | SEE PLANS | 24x24 | 15 | 25 | 0.1 | |
| RG-2 | TITUS OMNI | PLAQUE FACE | RETURN | SEE PLANS | 24x24 | 14 | 25 | 0.1 | |
| RG-3 | TITUS OMNI | PLAQUE FACE | RETURN | SEE PLANS | 24x24 | 12 | 25 | 0.1 | |
| RG-4 | TITUS 350RL | LOUVERED FACE | RETURN | SEE PLANS | 24x24 | 12x12 | 25 | 0.1 | |
| RG-5 | TITUS OMNI | PLAQUE FACE | RETURN | SEE PLANS | 24x24 | 12 | 25 | 0.1 | |
| RG-6 | TITUS 350RL | LOUVERED FACE | RETURN | SEE PLANS | 24x10 | 24x10 | 25 | 0.1 | |
| RG-7 | TITUS OMNI | PLAQUE FACE | RETURN | SEE PLANS | 24x24 | 8 | 25 | 0.1 | |
| RG-8 | TITUS OMNI | PLAQUE FACE | RETURN | SEE PLANS | 24x24 | 10 | 25 | 0.1 | |
| RG-9 | TITUS OMNI | PLAQUE FACE | RETURN | SEE PLANS | 24x24 | 8 | 25 | 0.1 | |
| EG-4 | TITUS OMNI | PLAQUE FACE | EXHAUST | SEE PLANS | 24x24 | 12 | 25 | 0.1 | |
| EG-5 | TITUS OMNI | PLAQUE FACE | EXHAUST | SEE PLANS | 12x12 | 8 | 25 | 0.1 | |
| EG-1-ERV | TITUS OMNI | PLAQUE FACE | ERV-EXHAUST | SEE PLANS | 24x24 | 6 | 25 | 0.1 | |
| EG-2-ERV | TITUS OMNI | PLAQUE FACE | ERV-EXHAUST | SEE PLANS | 24x24 | 8 | 25 | 0.1 | |
| EG-3-ERV | TITUS OMNI | PLAQUE FACE | ERV-EXHAUST | SEE PLANS | 24x24 | 10 | 25 | 0.1 | |
| EG-4-ERV | TITUS 350RL | LOUVERED FACE | ERV-EXHAUST | SEE PLANS | 24x8 | 24x8 | 25 | 0.1 | |
| LS-1 | TITUS FL-20 | LINEAR | SUPPLY | SEE PLANS | 1-SLOT, 4 FT | 10 | 25 | 0.1 | |
| LS-2 | TITUS FL-20 | LINEAR | SUPPLY | SEE PLANS | 1-SLOT, 4 FT | 12 | 25 | 0.1 | |
| LR-1 | TITUS FL-20 | LINEAR | RETURN | SEE PLANS | 1-SLOT, 4 FT | 12 | 25 | 0.1 | |
| | | | | | | | | | |

### ROOF HOOD SCHEDULE

| TAG | MANUFACTURER | MODEL NUMBER | SERVICE | THROAT SIZE (IN) | CURB SIZE (IN) | HOOD SIZE: AxB (IN) | AIRFLOW (CFM) | dP (" WC) | NOTES |
|---|---|---|---|---|---|---|---|---|---|
| RHE-1 | GREENHECK | FGR | EF-4 (BATH EXHAUST) | 8x8 | 14x14 | 22x27 | 50 | 0.02 | 1 |
| RHE-2 | GREENHECK | FGR | EF-2 (MEN'S ROOM) | 8x12 | 14x18 | 22x27 | 277 | 0.03 | 1 |
| RHE-3 | GREENHECK | FGR | EF-3 (WOMEN'S ROOM) | 8x12 | 14x18 | 22x27 | 277 | 0.03 | 1 |
| RHI-1 | GREENHECK | FGI | EF-1 (ATTIC INTAKE AIR) | 16x24 | 22x30 | 36x39 | 1165 | 0.04 | 1 |
| | | | | | | | | | 1 |
| | | | | | | | | | |

1. INSECT SCREENS, 1"x1" SS WIREMESH.

### LOUVER SCHEDULE

| TAG | MANUFACTURER | MODEL # | SERVICE | DIMENSIONS (WxHxd) | AIRFLOW (CFM) | FREE AREA (SQFT) | FREE AREA VELOCITY (FT/MIN) | NOTES |
|---|---|---|---|---|---|---|---|---|
| LO-1 | RUSKIN | ELF211D | ATTIC | 36x36x2 | 1165 | 3.19 | 365 | 1, 2 |
| | | | | | | | | |

1. INSECT SCREENS, 1"x1" SS WIREMESH.
2. DRAINABLE BLADES.

1. COORDINATE EXACT DIFFUSER LOCATION WITH LIGHTS AND SPRINKLER HEADS. REFER TO ARCHITECTURAL PLANS.
2. DIFFUSER FRAME, BORDER, AND FINISH/COLOR, SHALL BE APPROVED BY ARCHITECT AND BE SUITABLE/COMPATIBLE WITH CEILING TYPE AND GRID THAT IT IS TO BE INSTALLED IN.
3. PROVIDE ALL ACCESSORIES REQUIRED FOR COMPLETE INSTALLATION.
4. WHERE DUCT CONNECTING TO THE DIFFUSER (OR PLENUM) IS SMALLER THAN THE SPECIFIED DIFFUSER NECK SIZE, PROVIDE AND INSTALL CONICAL INCREASER.
5. BASIS OF DESIGN IS TITUS.
7. TRANSITION DUCT SIZE TO NECK SIZE AS REQUIRED TO COMPLETE INSTALLATION.
8. PROVIDE WITH BLACK BACKING FOR ALL DIFFUSERS.
9. OPPOSED BLADE DAMPERS AT DIFFUSERS SHOULD BE AVOIDED UNLESS SHOWN IN THE SCHEDULE DUE TO SPACE CONSTRAINTS. ALL BALANCING IS THROUGH MANUAL VOLUME DAMPERS IN DUCTS

BYRAM MUNCIPAL BUILDING
ADMINISTRATIVE / CIVIL
10 MANSFIELD DRIVE,
LOTS 16.01 - BLOCK 365
BYRAM TOWNSHIP
SUSSEX COUNTY, NEW JERSEY

THE NADER GROUP, LLC
Architects, Engineers, & Surveyors
111 Mill Street
Hackettstown, NJ 07840
p.908.850.3500 | f.908.441.5803
e. wassim.nader@thenadergroup.com
www.naderhouseofdesign.com

BRIAN D. TANNENHAUS

NJ PROFESSIONAL ENGINEER
NO. GE 45801

DATE: XX/XX/XXXX

BD engineering
NJ CERTIFICATE OF AUTHORIZATION – 24GA28116100
BD Engineering, LLC
44 Main Street, Farmingdale, NJ 07727
732-886-5432
www.bd-engineering.com Project No. 210133

| No. | DATE | REVISION |
|---|---|---|
| 00 | 08/01/23 | BID SET |

DRW BY: DRAWNBY
SCALE: AS NOTED
DATE: JUNE 16, 2023
JOB No. 18.TNG029
DRAWING Name
HVAC DETAILS AND SCHEDULES

DRAWING No.
M-303

8/4/2023 3:59 PM

DOAS-1 UNIT WITH ERV:
- UNIT WITH PACKAGED CONTROLS.

RUN-CONDITIONS - SCHEDULED:
- SYSTEM ON/OFF: THE SYSTEM ON/OFF SELECTOR IS FOUND IN THE SYSTEM ON/OFF MENU OF THE CONTROLLER'S MAIN MENU USING THE UNIT'S DISPLAY TERMINAL. REMOTE ON/OFF:
  1) IF A REMOTE ON/OFF SWITCH IS FIELD WIRED INTO THE UNIT CONTROLLER, THE REMOTE ON/OFF INPUT REQUIRES A VOLTAGE FREE DRY CONTACT CLOSURE TO START UNIT OPERATION.
  2) THE UNIT SHALL RUN ACCORDING TO A USER DEFINABLE TIME SCHEDULE IN THE FOLLOWING MODES:

OCCUPIED MODE:
ONCE THE OUTDOOR AND EXHAUST AIR DAMPER ARE OPEN, THE OUTPUT FOR THE SUPPLY AND EXHAUST AIR BLOWERS ARE ENERGIZED.
SAFETIES:
THE CONTROLLER MONITORS FOR LOSS OF AIR FLOW BY THE AIR PROVING SWITCH. WHEN A LOSS OF AIRFLOW OCCURS, THE OUTPUT FOR THE SUPPLY AND EXHAUST AIR BLOWERS ARE DEENERGIZED AND THE CONTROLLER PROVIDES A LOSS OF AIRFLOW ALARM.

UNOCCUPIED MODE:
DURING UNOCCUPIED MODE, OUTSIDE AND EXHAUST AIR DAMPERS ARE CLOSED AND THE SUPPLY AND EXHAUST AIR FANS ARE OFF.

UNOCCUPIED OVERRIDE:
UNOCCUPIED OVERRIDE ARE INITIATED
- BY USER INTERFACE.
  1) BY DIGITAL INPUT VIA DRY CONTACTS FROM A REMOTE PUSH BUTTON.

COOLING MODE:
COOLING IS BASED ON COOLING DEMAND WHICH IS CALCULATED BY THE SUPPLY AIR TEMPERATURE (SAT) SENSOR, SUPPLY COOL SET POINT, AND ZONE TEMPERATURE.

THE UNIT CONTROLLER SHALL MEASURE THE ZONE TEMPERATURE AND MODULATE AND STAGE COMPRESSORS ALONG WITH THE SUPPLY FAN SPEED TO MAINTAIN SUPPLY AIR TEMPERATURE COOLING SETPOINT.
THE COOLING SHALL BE ENABLED WHENEVER:
- OUTSIDE AIR TEMPERATURE IS GREATER THAN 60F (ADJ.).
  1) AND THE SUPPLY AND EXHAUST FANS ARE ON.
  2) AND THE HEATING IS NOT ACTIVE.
  3) AND THE ZONE TEMPERATURE IS ABOVE COOLING SETPOINT.

ELECTRIC HEATING:
HEATING IS BASED ON HEATING DEMAND WHICH IS CALCULATED BY THE SUPPLY AIR TEMPERATURE (SAT) SENSOR, SUPPLY HEAT SET POINT, AND ZONE TEMPERATURE.
THE CONTROLLER SHALL MEASURE THE SUPPLY AIR TEMPERATURE AND STAGE/MODULATE THE HEATING AND THE SUPPLY FAN SPEED TO MAINTAIN SUPPLY AIR HEATING SETPOINT.
THE HEATING SHALL BE ENABLED WHENEVER:
- OUTSIDE AIR TEMPERATURE IS LESS THAN 65F (ADJ.).
  1) AND THE SUPPLY AND EXHAUST FANS ARE ON.
  2) AND THE COOLING IS NOT ACTIVE.
  3) AND THE ZONE TEMPERATURE IS BELOW HEATING SETPOINT.

SPACE DEW POINT CONTROL:
IF THE SPACE DEW POINT RISES ABOVE DEWPOINT SET POINT PLUS DEAD BAND THEN SPACE DEW POINT CONTROL BECOMES ACTIVE. DURING SPACE DEW POINT CONTROL, THE LEAVING AIR TEMPERATURE FROM THE EVAPORATOR COIL SHALL BE LIMITED TO THE SUPPLY DEW POINT SET POINT.

HOT GAS REHEAT:
THE HOT GAS REHEAT COIL IS MODULATED TO MAINTAIN THE SUPPLY AIR TEMPERATURE AT THE REHEAT SET POINT. DURING DEHUMIDIFICATION/DEW POINT CONTROL, THE OUTDOOR AIR IS CONDITIONED TO MAINTAIN THE LEAVING EVAPORATOR TEMPERATURE OF THE EVAPORATOR COIL AT THE SUPPLY AIR DEW POINT SET POINT.
IF THE SUPPLY AIR TEMPERATURE IS LESS THAN THE REHEAT SET POINT AND THE MODULATED COMPRESSOR IS OPERATING FOR DEHUMIDIFICATION/ DEW POINT CONTROL, THE HOT GAS REHEAT IS MODULATED TO MAINTAIN THE SUPPLY AIR TEMPERATURE AT THE REHEAT SET POINT.

FREE COOLING:
THE SYSTEM SHALL PERFORM FREE COOLING WHEN THE OUTDOOR AIR TEMPERATURE IS BELOW THE SUPPLY AIR TEMPERATURE MINUS ½ OF THE CONTROL SET POINT'S BAND SETTING AND THE SUPPLY TEMPERATURE IS ABOVE THE SUPPLY TEMPERATURE SET POINT PLUS ½ THE PROPORTIONAL BAND SET POINT.

FREE HEATING:
THE SYSTEM SHALL PERFORM FREE HEATING WHEN THE OUTDOOR AIR TEMPERATURE IS ABOVE THE SUPPLY AIR TEMPERATURE PLUS ½ OF THE CONTROL SET POINT'S BAND SETTING AND THE SUPPLY TEMPERATURE IS BELOW THE SUPPLY TEMPERATURE SET POINT PLUS ½ THE PROPORTIONAL BAND SET POINT.

ENERGY RECOVERY WHEEL:
THE CONTROLLER SHALL ENABLE THE ENERGY RECOVERY UNIT WHENEVER THE UNIT IS IN OCCUPIED MODE.
THE SUPPLY FAN AND EXHAUST FAN SHALL BOTH RUN SIMULTANEOUSLY DURING NORMAL OPERATION.
THE CONTROLLER SHALL MODULATE THE WHEEL SPEED TO INCREASE THE ENERGY EFFICIENCY AND PROTECT FROM FROST.

1ST FLOOR SUPERMARKET PRESSURIZATION CONTROL:
IF THE UNIT BAROMETRIC EXHAUST DAMPER IS NOT ABLE TO MAINTAIN FLOOR PRESSURIZATION THEN:
DOAS-1-B-2: MODULATE THE RETURN/EXHAUST FAN SPEED TO MAINTAIN 1ST FLOOR SPACE DP SETPOINT: 0.05" WC.

BASEMENT SUPERMARKET PRESSURIZATION CONTROL:
IF THE UNIT BAROMETRIC EXHAUST DAMPER IS NOT ABLE TO MAINTAIN FLOOR PRESSURIZATION THEN:
DOAS-1-B-1: MODULATE THE RETURN/EXHAUST FAN SPEED TO MAINTAIN 1ST FLOOR SPACE DP SETPOINT: 0.05" WC.

GLOBAL ALARM:
SHOULD THE UNIT GO INTO AN ALARM CONDITION ON ANY OF THE FOLLOWING ITEMS LISTED BELOW, A RELAY WILL BE ENERGIZED TO PROVIDE A DRY CONTACT CLOSURE TO CONTROL A FIELD PROVIDED ALARM BUZZER OR INDICATOR LIGHT TO ALERT THE CUSTOMER OF THE ALARM CONDITION WITH THE UNIT. THE POWER REQUIRED TO DRIVE THE FIELD PROVIDED DEVICE SHALL BE 24VAC POWERING A DEVICE OF LESS THAN 3 AMPS MAXIMUM THROUGH THE FACTORY PROVIDED RELAY:

LOSS OF AIRFLOW
DRAIN PAN OVERFLOW
DIRTY AIR FILTER
HEATER HIGH TEMPERATURE LIMIT
DAMPER FAILED TO OPEN
FAN MOTOR OVERLOAD
FIRE/SMOKE DETECTED
FREEZE STAT ALARM (WITH FREEZE STAT OPTION)
COMPRESSOR HIGH AND LOW PRESSURE
SENSOR FAILURE
TEMPERATURE HIGH OR LOW ALARMS

SMOKE DETECTION:
THE UNIT SHALL SHUT DOWN UPON RECEIVING A SUPPLY OR RETURN AIR SMOKE DETECTOR STATUS AND AND A SIGNAL IS SENT TO THE FIRE ALARM SYSTEM.

SENSORS:
OAT: OUTDOOR AIR TEMPERATURE
OAH: OUTDOOR AIR HUMIDITY
SPAH: SPACE AIR HUMIDITY
SAT: SUPPLY AIR TEMPERATURE SENSOR
dP: SPACE SENSOR 1ST FLOOR

PROVIDE A TE-200 CENTRAL CONTROLLER:

TRANE-MITSUBISHI CONTROL SYSTEM:

PROVIDE CONTROLS CABLING AND CONDUITS FOR COMMUNICATION BETWEEN THE FAN COILS, T'STATS, REFRIGERANT BRANCH HEAT RECOVERY BOXES, OUTDOOR CONDENSING UNITS AND BACnet DDC GATEWAY.

EUH-1, EBB-1 ELECTRIC UNIT HEATERS:
- BUILT IN THERMOSTAT.

RUN-CONDITIONS:
- THE UNIT WILL BE ENERGIZED BY THE THERMOSTAT TO MAINTAIN SPACE HEATING TEMPERATURE SET POINT.

SEQUENCE OF OPERATION SPLIT SYSTEM COOLING AND HEATING (CU-15, AHU-15 SERVER ROOM):

1. SYSTEM START-UP: ENABLE A/C UNIT FROM THE SYSTEM THERMOSTAT CONTROLLER.
2. SYSTEM OFF: DISABLE A/C UNIT FROM THE SYSTEM THERMOSTAT CONTROLLER.

3. COOLING MODE: IF SPACE AIR TEMP. > SET POINT (68 F DEFAULT) TURN THE SUPPLY FAN ON AND ENABLE COMPRESSORS AND CONDENSER FANS TO CYCLE ON/OFF AND MODULATE.

4. HEATING MODE: THE SPLIT SYSTEM IS COOLING ONLY

4. SAFETY: INOPERATION OF ANY FAN OR COMPRESSOR, LOW EVAPORATIVE PRESSURE, HIGH CONDENSER PRESSURE, FREEZE STAT, SHALL DISPLAY AN ALARM AT THE THERMOSTAT CONTROLLER.

5. NOTE: SUFFICIENT TIME DELAY SHALL BE PROVIDED BETWEEN EACH CONTROL STEP TO PREVENT RAPID CYCLING OF EQUIPMENT.

EF-2 AND EF-3 (TOILET EXHAUST) AND EF-4 (BATH TUB ROOM):
- MAGNETIC CONTACTOR.

RUN-CONDITIONS:
- INTERLOCK WITH LIGHTS VIA RELAY

EF-1 (ATTIC EXHAUST FAN):
- MAGNETIC CONTACTOR.

RUN-CONDITIONS:
- THERMOSTAT SET FOR SUMMER OPERATION.
  THERMOSTAT SET FOR 85 F.

BYRAM MUNCIPAL BUILDING
ADMINISTRATIVE / CIVIL
10 MANSFIELD DRIVE,
LOTS 16.01 - BLOCK 365
BYRAM TOWNSHIP
SUSSEX COUNTY, NEW JERSEY


THE NADER GROUP, LLC
Architects, Engineers, & Surveyors
111 Mill Street
Hackettstown, NJ 07840
p.908.850.3500 | f.908.441.5803
e. wassim.nader@thenadergroup.com
www.naderhouseofdesign.com

BRIAN D. TANNENHAUS

NJ PROFESSIONAL ENGINEER
NO. GE 45801
DATE:___XX/XX/XXXX___

BD engineering
NJ CERTIFICATE OF AUTHORIZATION – 24GA28116100
BD Engineering, LLC
44 Main Street, Farmingdale, NJ 07727
www.bd-engineering.com Project No. 210133


| No. | DATE | REVISION |
|---|---|---|
| 00 | | |
| | 08/01/23 | BID SET |

DRW BY: DRAWNBY
SCALE: AS NOTED
DATE: JUNE 16, 2023
JOB No. 18.TNG029
DRAWING Name
HVAC CONTROLS
DRAWING No.
M-400

8/4/2023 3:59 PM

## ELECTRICAL GENERAL NOTES

1. DRAWINGS ARE DIAGRAMMATIC AND INDICATE GENERAL ARRANGEMENT OF SYSTEMS AND WORK. FOLLOW DRAWINGS IN LAYING OUT WORK AND CHECK DRAWINGS OF OTHER TRADES TO VERIFY SPACE CONDITIONS. MAINTAIN HEADROOM AND SPACE CONDITIONS IN ALL CASES.
2. THE CONTRACTOR SHALL BRING ANY CONFLICTS IN THE DRAWINGS TO THE ATTENTION OF THE ENGINEER DURING THE BIDDING PROCESS. IF NOT BROUGHT UP TO THE ENGINEER DURING THE BIDDING PROCESS THE MORE EXPENSIVE OPTION SHALL BE CHOSEN FOR BIDDING PURPOSES.
3. PASS RACEWAYS OVER WATER, STEAM OR OTHER PIPING WHEN PULL BOXES ARE NOT REQUIRED. NO RACEWAY SHALL BE INSTALLED WITHIN 6" OF STEAM OR HOT WATER PIPES OR APPLIANCES (EXCEPT PIPE CROSSINGS WHERE RACEWAY SHALL BE AT LEAST 3" FROM PIPE COVERS).
4. CUT CONDUIT ENDS SQUARE, REAM SMOOTH, PAINT MALE THREAD OF FIELD THREADED RACEWAYS WITH GRAPHITE BASE PIPE COMPOUND. DRAW UP TIGHT WITH RACEWAY COUPLING.
5. HORIZONTAL OR CROSS RUNS IN PARTITIONS AND WALLS ARE NOT PERMITTED.
6. DO NOT RUN CONDUIT IN PRECAST ROOF SLABS, IN 2" SLABS OR IN TERRAZZO FLOOR FINISH.
7. LEAVE WIRES WITH SUFFICIENT SLACK TO PERMIT FINAL CONNECTIONS.
8. PROVIDE NYLON FISH WIRE IN ALL EMPTY RACEWAYS OVER 10' LONG.
9. PROVIDE PULL BOXES EVERY 100' AND WHEREVER REQUIRED BY CODE FOR ALL EMPTY RACEWAY RUNS. COORDINATE PULLBOX LOCATIONS WITH OTHER TRADES IN FIELD.
10. VERIFY LOCATIONS OF OUTLETS AND SWITCHES IN FINISHED ROOMS WITH ARCHITECTURAL DRAWINGS OF INTERIOR DETAILS AND FINISH. IN CENTERING OUTLETS AND LOCATING BOXES AND OUTLETS, ALLOW FOR OVERHEAD PIPES, DUCTS AND MECHANICAL EQUIPMENT, VARIATIONS IN FIREPROOFING AND PLASTERING, WINDOW AND DOOR TRIM, PANELING, HUNG CEILINGS AND THE LIKE. CORRECT ANY INACCURACY RESULTING FROM FAILURE TO DO SO WITHOUT EXPENSE TO OWNER.
11. LOCATIONS INDICATED FOR LOCAL WALL SWITCHES ARE SUBJECT TO MODIFICATIONS AT OR NEAR DOORS. COORDINATE WITH ARCHITECT AND INSTALL SWITCH ON SIDE OPPOSITE HINGE. VERIFY FINAL HINGE LOCATIONS IN FIELD PRIOR TO SWITCH OUTLET INSTALLATION.
12. COVERS OF JUNCTION AND PULLBOXES SHALL BE READILY ACCESSIBLE.
13. PROVIDE PULLBOXES WHERE INDICATED, WHERE REQUIRED BY CODE AND WHEREVER NECESSARY TO FACILITATE PULLING OF WIRE. COORDINATE PULLBOX LOCATIONS WITH OTHER TRADES.
14. GENERALLY, DO NOT LOCATE JUNCTION AND PULL BOXES EXPOSED IN FINISHED SPACES. WHERE NECESSARY, REROUTE RACEWAYS OR MAKE OTHER ARRANGEMENTS FOR CONCEALMENT.
15. SUPPORT PANEL, JUNCTION AND PULLBOXES INDEPENDENTLY TO BUILDING STRUCTURE, WITH NO WEIGHT BEARING ON RACEWAYS.
16. EC IS RESPONSIBLE TO PROVIDE ACCESS PANELS FOR ANY CONCEALED ELECTRICAL WORK THAT MUST BE ACCESSIBLE EITHER BY CODE OR AS INDICATED IN THE DOCUMENTS. ALL ACCESS DOOR LOCATIONS SHALL BE REVIEWED AND APPROVED BY ARCHITECT PRIOR TO INSTALLATION OF DEVICE REQUIRING THE ACCESS PANEL. ALL ACCESS DOORS MUST MATCH THE FIRE RATING AND CONSTRUCTION TYPE OF THE CEILING OR WALL PENETRATION AS DESIGNATED ON THE ARCHITECTURAL DRAWINGS.
17. ALL ELECTRICAL EQUIPMENT INCLUDING BUT NOT LIMITED TO RACEWAYS, PULLBOXES, LUMINAIRES, ETC. SHALL BE HUNG FROM THE TOP CORD OR THE TOP OF A STEEL 'I' BEAM ONLY IN A STEEL STRUCTURE BUILDING.
18. CONNECT CONDUIT TO MOTOR CONDUIT TERMINAL BOXES WITH FLEXIBLE CONDUIT (MINIMUM 18" AND 50% SLACK). DO NOT TERMINATE IN OR FASTEN RACEWAYS TO MOTOR FOUNDATION.
19. PROVIDE 2#14 INDICATING PILOT LIGHT WIRES FROM PILOT LIGHT IN CONTROLLER TO LOAD SIDE OF DISCONNECT SWITCH. RUN WIRES IN BRANCH CIRCUIT CONDUIT AND INCREASE CONDUIT SIZE AS REQUIRED.
20. PULL NO THERMOPLASTIC WIRES AT TEMPERATURES BELOW 32°F. PROVIDE CABLE SUPPORTS FOR WIRE
21. IN RISER CONDUITS AS REQUIRED BY CODE.. PROVIDE SEPARATE RACEWAYS FOR CONDUCTORS OF NORMAL AND EMERGENCY CIRCUITS. WHERE COMMON BOXES ARE USED, PROVIDE BARRIERS BETWEEN NORMAL AND EMERGENCY WIRING.
22. PROVIDE SEPARATE RACEWAYS FOR CONDUCTORS OF NORMAL AND EMERGENCY CIRCUITS. WHERE COMMON BOXES ARE USED, PROVIDE BARRIERS BETWEEN NORMAL AND EMERGENCY WIRING.
23. WIRE COLOR CODING SHALL BE AS PER CODE AND SPECIFICATION. WHERE COLOR-CODED CABLE IS NOT AVAILABLE, CERTIFY IN WRITING, AND REQUEST PERMISSION FOR OVERLAP COLOR TAPING OF CONDUCTORS (MINIMUM LENGTH 6") IN ALL ACCESSIBLE LOCATIONS. COLOR CODING MUST BE USED CONSISTENTLY FOR THE ENTIRE PROJECT.
24. CONNECT NEW WORK TO EXISTING WORK IN A NEAT AND ACCEPTABLE MANNER. RESTORE EXISTING DISTURBED WORK TO ITS ORIGINAL CONDITION, INCLUDING MAINTENANCE OF WIRING CONTINUITY AS REQUIRED.
25. CONNECT NEW WORK TO EXISTING WORK WITH MINIMUM INTERFERENCE TO EXISTING FACILITIES. TEMPORARY SHUTDOWNS ARE PERMISSIBLE ONLY WITH WRITTEN CONSENT OF THE OWNER. ALARM AND EMERGENCY SYSTEMS ARE NOT TO BE INTERRUPTED.
26. ELECTRICAL CONNECTIONS AND DISCONNECTS ARE SHOWN FOR DIAGRAMMATIC PURPOSES AND THE CONTRACTOR SHALL NOT BASE THEIR BID ON THE LOCATION OF THOSE CONNECTIONS AND/OR DISCONNECTS. SUBMISSION OF A BID INDICATES AN UNDERSTANDING THE CONTRACTOR WILL CONNECT THE ELECTRICAL CIRCUIT TO THE EQUIPMENT IN THE LOCATION SPECIFIED BY THE MANUFACTURE OR PER CONSTRUCTION RESTRICTIONS AT NO ADDITIONAL COST TO THE CLIENT.
27. FIRESTOPPING SHALL BE INSTALLED WHENEVER WIRING OR RACEWAYS CROSS FIRE RATED PARTITIONS. REFER TO THE ARCHITECTURAL PLANS FOR FIRE RATED PARTITION LOCATIONS. THE FIRESTOPPING SHALL MATCH OR EXCEED THE FIRE RATING OF THE PARTITION PENETRATED. ALL FIRESTOPPING SHALL BE A UL LISTED ASSEMBLY.
28. THE CONTRACTOR SHALL NOTE THAT THE BRANCH AND FEEDER CIRCUITS MAY HAVE BEEN INCREASED IN SIZE FOR VOLTAGE DROP AND OTHER REASONS. THIS MAY RESULT IN THE CABLE NOT FITTING IN THE ELECTRICAL EQUIPMENTS LUG OR TERMINAL. IF THIS HAPPENS THE CONTRACTOR SHALL REDUCE THE WIRE SIZE TO THE MAXIMUM SIZE THAT WILL FIT UNDER THE ELECTRICAL EQUIPMENTS LUG OR TERMINAL. PROVIDE AN IRREVERSIBLE SPLICE(S) OR OTHER APPROVED METHOD. THE LENGTH OF CABLE SHALL BE MINIMIZED TO DIRECTLY OUTSIDE THE EQUIPMENT. THE SPLICE(S) SHALL NOT TAKE PLACE INSIDE THE EQUIPMENT UNLESS THE EQUIPMENT IS UL LISTED FOR THAT PURPOSE. FOR EQUIPMENT NOT UL LISTED PROVIDE A SPLICE BOX, SIZED AS REQUIRED, OUTSIDE THE EQUIPMENT FOR THE SPLICE(S). THE NEMA RATING OF THE SPLICE BOX SHALL MATCH THE NEMA RATING OF THE ELECTRICAL EQUIPMENT. AHJ APPROVED REDUCING ADAPTERS SUCH AS THOSE FROM BURNDY ARE ACCEPTABLE ALTERNATES. EC SHALL GET PERMISSION FROM THE AHJ TO USE THIS METHOD.
29. ALL DEVICE ELEVATIONS SHALL BE MOUNTED IN ACCORDANCE WITH ANSI A117. ALL CONTROL DEVICES (IE: SWITCHES, ETC.) SHALL BE MOUNTED NO HIGHER THAN 48" AFF TO TOP OF DEVICE. ALL INSERTION DEVICES (IE: POWER, TELEPHONE, DATA RECEPTACLES, ETC.) SHALL BE MOUNTED NO LOWER THAT 15" AFF TO BOTTOM OF JUNCTION BOX. ALL DEVICES MOUNTED ABOVE A COUNTER NOT DEEPER THAN 24" SHALL BE MOUNTED 46" AFF TO TOP DEVICE. OTHER MOUNTING HEIGHTS WILL BE AS NOTED ON THE DRAWINGS.
30. PANEL BOARDS SHALL ALL MEET UL67 REQUIREMENTS AND COME WITH SERVICE ENTRANCE BARRIERS.
31. UNLESS OTHERWISE NOTED, MOUNTING HEIGHTS FROM FLOOR TO CENTERLINE OF OUTLET:

    RECEPTACLES, DATA AND TELEPHONES:

    GENERALLY - 1'-6"
    OVER WORK BENCHES - 3'-6"

    WALL SWITCHES AND WALL TELEPHONES :
    4'-0"(TO TOP OF JUNCTION BOX)

    WALL FIXTURES - 7'-6"

    MOTOR CONTROLLERS - 5'-0"

    FA AUDIO DEVICE/ STROBES - 6-8" TO THE BOTTOM OF THE LENSE (OR 6" BELOW CEILING, WHICHEVER IS LOWER)

    FA STROBE LIGHTS - 6'-8" TO THE BOTTOM OF THE LENSE (OR 6" BELOW CEILING, WHICHEVER IS LOWER)

    FA PULL STATIONS NO LOWER THAN 3'-6"AFF OR HIGHER THAN 4'-0"AFF TO TOP OF DEVICE.

    CLOCKS - 7'-6"

    EXIT SIGN - MOUNT JUST ABOVE THE DOOR WHEN LOCATED AT A DOOR LOCATION, UNLESS OTHERWISE NOTED. WHEN NOT BY A DOOR 8'-0"AFF, UON.
32. ELECTRICAL CONTRACTOR IS RESPONSIBLE FOR COORDINATING ALL FINAL UTILITY CONNECTIONS WITH THE UTILITY COMPANIES. FOR EXAMPLE: IF THE PROJECT HAS AN EXISTING OR NEW SERVICE THE CONTRACTOR SHALL CALL THE UTILITY COMPANY AND TAKE OVER AS THE LEAD CONTACT PERSON FOR THE ADDITIONAL LOAD APPLICATION AND BE THE NEW POINT OF CONTACT FOR ANY CHANGES OR COORDINATION REQUIRED. THIS INTRODUCTION AND CHANGE OF POINT CONTACT SHALL HAPPEN WITHIN THE FIRST TWO WEEKS OF STARTING THE PROJECT. IT IS THE EC'S RESPONSIBILITY TO COMMUNICATE WITH THE UTILITY COMPANY SERVICE START DATES AS TO NOT DELAY THE PROJECT WITH INADEQUATE UTILITY SERVICES.

ELECTRICAL DEMOLITION NOTES

1. THE CONTRACTOR SHALL INCLUDE IN HIS BID ALL COSTS ASSOCIATED WITH REMOVALS AND RELOCATIONS OF ELECTRICAL WORK AS DESCRIBED IN THE SPECIFICATIONS, WITH ALLOWANCES FOR EXPECTED OR UNFORSEEN DIFFICULTIES WHEN CONCEALED WORK HAS BEEN OPENED. NO CLAIMS FOR ADDITIONAL WORK ASSOCIATED WITH DEMOLITION WILL BE ACCEPTED, EXCEPT IN CERTAIN CASES CONSIDERED JUSTIFIABLE BY THE ARCHITECT.
2. THE CONTRACTOR SHALL REMOVE AND/OR RELOCATE ALL EXISTING ELECTRICAL WORK WHICH INTERFERES WITH THE NEW ARCHITECTURAL AND ELECTRICAL LAYOUTS IN FULL COORDINATION WITH THE ARCHITECT'S DEMOLITION PLANS. ALL SYSTEMS WHICH ARE NO LONGER REQUIRED TO FUNCTION SHALL BE DE-ENERGIZED AND DISCONNECTED AT THE SOURCE OF POWER SUPPLY.
3. THE CONTRACTOR SHALL PERFORM DEMOLITION AND REMOVAL WORK WITH A MINIMUM OF INTERFERENCE TO FUNCTIONING ELECTRICAL SYSTEMS. ALL AFFECTED SYSTEMS SHALL BE RECONNECTED AND RESTORED.
4. DEMOLITION AND REMOVAL WORK SHALL BE PERFORMED IN A NEAT AND WORKMANLIKE MANNER. THE CONTRACTOR SHALL PATCH, REPAIR OR OTHERWISE RESTORE ANY DAMAGED INTERIOR OR EXTERIOR BUILDING SURFACE TO ITS ORIGINAL CONDITION.
5. THE CONTRACTOR SHALL REMOVE ALL ELECTRICAL OUTLETS, SWITCHES AND OTHER DEVICES, COMPLETE WITH ASSOCIATED WIRING, CONDUITS, ETC., FROM PARTITIONS THAT ARE TO BE REMOVED. WHERE THE REMOVAL OF THESE ITEMS DISRUPTS EXISTING WIRING THAT IS TO REMAIN, THE CONTRACTOR SHALL INSTALL JUNCTION BOXES AND OTHER DEVICES AND PROVIDE BYPASS CONNECTIONS NECESSARY TO MAKE CIRCUITS AFFECTED CONTINUOUS AND READY FOR OPERATION. OTHERWISE, WIRING SHALL BE REMOVED BACK TO THE NEAREST ELECTRICAL JUNCTION BOX THAT IS TO REMAIN OR TO PANELBOARD.
6. ALL RACEWAYS WHICH BECOME EXPOSED DURING THE ALTERATION WORK SHALL BE REMOVED AND REROUTED CONCEALED BEHIND FINISHED SURFACES.
7. ALL UNUSED OUTLET BOXES OR CAPPED FLOOR OUTLETS SHALL BE PROVIDED WITH MATCHING BLANK COVERS.
8. PORTIONS OF FEEDER RUNS TO BE REMOVED OR ABANDONED AS A RESULT OF DEMOLITION WORK, BUT WHICH ARE REQUIRED TO REMAIN ENERGIZED, SHALL BE CUT AT CONVENIENT LOCATIONS, REROUTED AND RECONNECTED. NEW FEEDER EXTENSIONS SHALL MATCH EXISTING IN CABLE TYPE, AMPACITY, CONDUIT SIZE, ETC..
9. THE CONTRACTOR SHALL NOTIFY THE OWNER OF THE PROJECTED DEMOLITION ANS PHASING SCHEDULE SO THAT REMOVAL OR RELOCATION OF AFFECTED UTILITIES MAY BE CARRIED OUT IN FULL COORDINATION WITH THE PROJECT REQUIREMENTS. THE CONTRACTOR SHALL FOLLOW THE ARCHITECT'S DEMOLITION AND PHASING SCHEDULE, AND PROCEED IN THE APPROPRIATE, SPECIFIED SEQUENCE.
10. ALL EXISTING MATERIAL WHICH IS SPECIFIED TO BE REMOVED UNDER THIS CONTRACT, SHALL BECOME THE PROPERTY OF THE CONTRACTOR, AND SHALL BE DISPOSED OF IN ACCORDANCE WITH ALL APPLICABLE LAWS AND REGULATIONS.
11. ALL EXISTING MATERIAL WHICH IS SPECIFIED TO BE REMOVED AND REUSED OR RETURNED TO THE OWNER SHALL BE CAREFULLY REMOVED AND PRESERVED, AND TURNED OVER TO THE OWNER IN OPERABLE CONDITION.
12. ARRANGE TO WORK CONTINUOUSLY, INCLUDING OVERTIME, IF REQUIRED, TO ASSURE THAT SYSTEMS SHUTDOWNS WILL BE MINIMIZED, AND LIMITED TO THE TIME REQUIRED TO MAKE FINAL CONNECTIONS AND PERFORM NECESSARY TESTS TO ASSURE CORRECT INSTALLATION.
13. THE SHUTDOWN OF EXISTING BUILDING SERVICES SHALL BE COORDINATED WITH THE OWNER. ARRANGEMENTS SHALL BE MADE, IN WRITING, AT LEAST FIVE (5) BUSINESS DAYS PRIOR TO ANY SCHEDULED SHUTDOWN.

## POWER DEVICES

- SIMPLEX RECEPTACLE
- DUPLEX RECEPTACLE
- CEILING MOUNTED RECEPTACLE
- GFCI TYPE RECEPTACLE
- QUAD RECEPTACLE
- FLOOR MOUNTED RECEPTACLE
- SPECIAL PURPOSE RECEPTACLE, MATCH EQUIPMENT SERVED
- TAMPERPROOF DUPLEX RECEPTACLE
- EXPLOSION PROOF RECEPTACLE
- IG — ISOLATED GROUND RECEPTACLE
- SIMPLEX ISOLATED GROUND RECEPTACLE
- FLOOR OUTLET, PROVIDE DEVICE AS SHOWN ON DRAWINGS.
- FLOOR OUTLET WITH STUB UP, PROVIDE DEVICE AS SHOWN ON DRAWINGS.
- P — FIRE RATED FLOOR OUTLET, PROVIDE DEVICE AS SHOWN ON DRAWINGS.
- 1 — INDICATES CIRCUIT NUMBER
- WP — INDICATES DEVICE HAS A WEATHERPROOF WHILE IN USE COVER.
- + — INDICATES DEVICE IS MOUNTED ABOVE THE COUNTER.
- ENCLOSED CIRCUIT BREAKER
- UNFUSED DISCONNECT SWITCH
  - 30A/3P — INDICATES SIZE/NUMBER OF POLES OR SIZE PER CIRCUIT SIZE
- FUSED DISCONNECT SWITCH
  - 30A/30A/3P — INDICATES SWITCH SIZE/FUSE SIZE/NUMBER OF POLES OR SIZE PER CIRCUIT SIZE
- M — DISCONNECT SWITCH BY HVAC CONTRACTOR
- MOTOR
- EMERGENCY POWER OFF SWITCH
- St — MOTOR RATED SWITCH WITH THERMAL OVERLOADS
- J — CEILING MOUNTED DROP CORD, PROVIDE DEVICE AS SHOWN ON THE PLANS.
- J — CONCEALED JUNCTION BOX
- J — SURFACE MOUNTED JUNCTION BOX
- 208V PANEL, U.O.N.
- 480V PANEL, U.O.N.
- SYSTEM PANEL
  FA = FIRE ALARM
  SEC = SECURITY
  LIGHT = LIGHTING CONTROL
- GROUND

## LUMINAIRES

- AX — FIXTURE TYPE
- TYPICAL LUMINAIRE, REFER TO THE LUMINIARE OR LIGHTING SCHEDULE FOR ADDITIONAL INFORMATION.
- XXX-XX a
  - a — LOWER CASE LETTER INDICATES LOCAL SWITCH DESIGNATION.
  - CIRCUIT NUMBER, REFER TO THE PANELSCHEDULES FOR ADDITIONAL INFORMATION.
  - PANEL ID(NAME) UNLESS OTHERWISE NOTED.
- SERVICE LIGHT LUMINAIRE

## FIRE ALARM DEVICES

- F C — FIRE ALARM STROBE
  UNLESS OTHERWISE NOTED, ALL STROBES SHALL BE 15CD(CANDELLA) TYPE.

  C = CEILING MOUNTED. TYPICAL ALL FIRE ALARM DEVICES.
- FIRE ALARM HORN/STROBE
  UNLESS OTHERWISE NOTED, ALL STROBES SHALL BE 15CD(CANDELLA) TYPE.
- F — FIRE ALARM PULLSTATION
- S — DUCT DETECTOR - UNLESS COORDINATED DURING BIDDING WITH THE HVAC CONTRACTOR EC AND/OR FIRE ALARM CONTRACTOR SHALL PROVIDE THE TUBES IN THE DUCTWORK FOR THE DETECTOR. PROVIDE COLD WEATHER/WEATHERPROOF COVER FOR DETECTORS LOCATED OUTSIDE OR IN SPACES LOWER THAN 70 DEGREES FAHRENHEIT.
- RTS — REMOTE TEST SWITCH - LOCATE IN CEILING SPACE BELOW HVAC UNIT.
- S PE — FIRE SMOKE DETECTOR:
  PE = PHOTOELECTRIC TYPE
  IO = IONIZATION TYPE
  ID = IN DUCT
  AS = AIR SAMPLING
  R = RELAY BASE
- CO — GAS DETECTION DEVICE:
  $CO_2$ = CARBON DIOXIDE DETECTOR
  CO = CARBON MONOXIDE DETECTOR
  HCL = HYDROGEN CHLORIDE DETECTOR
  $CH_4$ = METHANE DETECTOR
  ** DETECTORS SHALL HAVE A SOUNDER BASE WITH DISTINCT AND SEPARATE SOUND FROM MAIN SYSTEM
- R/F — HEAT DETECTION DEVICE:
  R/F = COMBINATION RATE OF RISE/FIXED TEMPERATURE
  F = FIXED TEMPERATURE
  R/C = RATE COMPENSATION
  R = RATE OF RISE ONLY
  ** UNLESS OTHERWISE NOTED TEMPERATURE RATINGS SHALL BE 135 DEGREES FAHRENHEIT.
- AIM — ADDRESSABLE INPUT MONITOR MODULE
- AIO 2 — ADDRESSABLE INPUT MONITOR MODULE, # DENOTES NUMBER OF INPUTS AND OUTPUTS
- AOM — ADDRESSABLE OUTPUT CONTROL MODULE
- WF — INTERFACE AND SUPERVISORY DEVICE:
  WF = FLOW DETECTOR/SWITCH
  HT = HIGH TEMPERATURE SWITCH
  LS = LEVEL DETECTOR/SWITCH
  LT = LOW TEMPERATURE SWITCH
  PS = PRESSURE DETECTOR SWITCH
  VS = VALVE SUPERVISORY SWITCH

## NOTES:

- X — DRAWING NOTE - 'x' DENOTES NOTE NUMBER SHOWN ON PLAN.
- X — KEY NOTE - 'x' DENOTES NOTE NUMBER SHOWN FOR ALL ELECTRICAL PLANS.
- X — DEMOLITION NOTE - 'x' DENOTES NOTE NUMBER SHOWN ON PLAN

## COMMUNICATION DEVICES

- TELEPHONE OUTLET, PROVIDE (1) 3/4"C WITH PULLSTRING AND PLASTIC BUSHING ON END TO THE NEAREST ACCESSIBLE CEILING SPACE.
- VOICE/DATA OUTLET, PROVIDE (1) 3/4"C WITH PULLSTRING AND PLASTIC BUSHING ON END TO THE NEAREST ACCESSIBLE CEILING SPACE.
- DATA OUTLET, PROVIDE (1) 3/4"C WITH PULLSTRING AND PLASTIC BUSHING ON END TO THE NEAREST ACCESSIBLE CEILING SPACE.

## WIRING DEVICES

- HOMERUN
- CONCEALED CIRCUIT
- CIRCUIT UNDER FLOOR OR GROUND
- BUZZER
- PUSH BUTTON
- CLOCK - DOTS INDICATE NUMBER OF FACES
- DS — SECURITY DEVICE
  DS = DOOR SWITCH
  CR = CARD READER
  KS = KEY SWITCH
  MD = MOTION DETECTOR
  ML = MAGNETIC LOCK
  PB = PANIC BUTTON
  KP = KEY PAD

## LUMINAIRE SWITCHES

- S — LUMINAIRE SWITCH
- $S_3$ — 3-WAY LUMINAIRE SWITCH
- $S_4$ — 4-WAY LUMINAIRE SWITCH
- $S_P$ — LUMINAIRE SWITCH WITH A PILOT LIGHT
- $S_D$ — DIMMER TYPE LUMINAIRE SWITCH
- $S_K$ — CAPTIVE KEY TYPE SWITCH
- $S_a$ — LUMINAIRE SWITCH
  - INDICATES LUMINAIRES IT WILL SWITCH
- $S_{OR}$ — OVERRIDE SWITCH
- $M_S$ — MOTION SENSOR TYPE LUMINAIRE SWITCH
  NOTE: THE MOTION SENSOR SHALL TURN OFF THE LUMINAIRE WITHIN 30 MINUTES OF AN OCCUPANT LEAVING THE SPACE.
- PC — PHOTOCELL
- $S_{LV}$ — LOW VOLTAGE SWITCH FOR MOTION SENSOR CONTROLLED LIGHTING.

## ABBREVIATIONS

A - AMP
AF - AMP FRAME
AFC - AVAILABLE FAULT CURRENT
AFF - ABOVE FINISHED FLOOR
AIC - AMP INTERRUPTING CURRENT
AHJ - AUTHORITY HAVING JURISDICTION
AT - AMP TRIP
ATS - AUTOMATIC TRANSFER SWITCH
BFC - BELOW FINISHED CEILING
C - CONDUIT
CB, C/B - CIRCUIT BREAKER
CD - CANDELA
CT - CONTROL TRANSFORMER
DP - DISTRIBUTION PANEL
EC, E.C. - ELECTRICAL CONTRACTOR
EX - EXISTING TO REMAIN
EM - EMERGENCY
EMT - ELECTRICAL METALLIC TUBING
F - FOOT
G.B. - GLASS BREAK
GFCI, GFI - 5MA GROUND FAULT CIRCUIT INTERRUPTER
GFP - 30mA GROUND FAULT PROTECTION DEVICE
GND - GROUND
LTG - LIGHTING
MCC - MOTOR CONTROL CENTER
MDP - MAIN DISTRIBUTION PANEL
NL - NIGHT LIGHT
NTS, N.T.S. - NOT TO SCALE
PDU - POWER DISTRIBUTION UNIT
PNL - PANEL
PT - POTENTIAL TRANSFORMER
RE - REMOVE EXISTING
REC - RECEPTACLE
REX - RELOCATE EXISTING
RGC - RIGID GALVANIZED CONDUIT
RPP - REMOTE POWER PANEL
SA - SURGE ARRESTER
SLD - SINGLE LINE DIAGRAM
SPD - SURGE PROTECTIVE DEVICE
STC - STANDARD TEST CONDITIONS
TYP. - TYPICAL
UGE - UNDERGROUND ELECTRIC
UGT - UNDERGROUND TELECOMMUNICATIONS
U.O.N., UON - UNLESS OTHERWISE NOTED
V - VOLT
WP - WEATHERPROOF, WHILE IN USE **IN AN AREA WHERE DIRECT WATER HOSE SPRAY WILL OCCUR THIS WILL MEAN THE DEVICE IS NEMA 4X RATED FOR HOSE DOWN.
W - WALL MOUNTED
WD - WASHDOWN AREA DEVICES SHALL BE NEMA 4X HOSE POWER WASHER CAPABLE WHILE IN USE SUCH AS CALBRITE COVERS.
WG - WIRE GUARD
XFMR - TRANSFORMER
XP -EXPLOSION PROOF
3P - THREE(3) POLES
2P - TWO(2) POLES
1P - ONE(1) POLE
3R - NEMA 3R TYPE ENCLOSURE
4X - NEMA 4X TYPE ENCLOSURE

## SINGLE LINE DIAGRAM

- XXXAF / XXXAT — CIRCUIT BREAKER
- KWH — UTILITY METER
- PANEL NAME — PANELBOARD
  AP = APPLIANCE
  LP = LIGHTING
  PP = POWER PANEL
  EL = EMERGENCY LIFESAFETY
  EC = CRITICAL EMERGENCY
  EE = ESSENTIAL EQUIPMENT
- GENERATOR
- CT
- ENCLOSED DISCONNECT SWITCH
- E N — ATS

FOR ALL SINGLE LINE DIAGRAM SYMBOLS, DEVICES SHOWN ENCLOSED BY BOX, AS SHOWN HERE, IS TO BE INSTALLED WITHIN AN ENCLOSURE. PROVIDE NEMA TYPE 1 ENCLOSURE, U.O.N.

NOT ALL SYMBOLS AND ABBREVIATIONS SHOWN ON THIS PLAN ARE USED IN THE FOLLOWING DRAWINGS.

## SYMBOL LEGENDS AND ABBREVIATIONS

### SURGE PROTECTION REQUIREMENTS

CONTRACTOR SHALL PROVIDE SURGE PROTECTION DEVICES(SPD) ON ALL DISTRIBUTION PANELS AND BRANCH CIRCUIT PANELS. CONTRACTOR SHALL FOLLOW THE CHART BELOW. SURGE SUPPRESSORS SHALL BE CLOSE COUPLED TO THE PANEL TO ALLOW FOR THE SHORTEST WIRE RUN. IF WALL SPACE DOES NOT ALLOW FOR AN EXTERIOR SPD MANUFACTURE PANEL INTEGRATED SPD'S ARE ACCEPTABLE.

| MINIMUM SURGE CURRENT CAPACITY BASED ON ANSI/IEEE C62.41 LOCATION CATEGORY | |
|---|---|
| CATEGORY | APPLICATION |
| C | SERVICE ENTRANCE LOCATIONS (SWITCHBOARDS, SWITCHGEAR, MCC, MAIN ENTRANCE) |
| **B** | HIGH EXPOSURE ROOF TOP LOCATIONS (DISTRIBUTION PANELBOARDS) |
| A | BRANCH LOCATIONS (PANELBOARDS, MCCS, BUSWAY) |

### FOR OTHER THAN DWELLING UNITS:(210.8F)

GFCI PROTECTION IS REQUIRED FOR ALL 125-VOLT THROUGH 250-VOLT RECEPTACLE OUTLETS SUPPLIED BY SINGLE-PHASE BRANCH CIRCUITS RATED 150 VOLTS OR LESS TO GROUND INSTALLED IN OUTDOOR LOCATIONS. IN ADDITION, GFCI PROTECTION IS REQUIRED FOR ALL RECEPTACLE OUTLETS SUPPLYING HEATING, AIR-CONDITIONING, AND REFRIGERATION EQUIPMENT, WHICH WOULD INCLUDE A 125-VOLT, SINGLE-PHASE, 15 OR 20 AMPERE-RATED RECEPTACLE OUTLET INSTALLED AT AN ACCESSIBLE LOCATION ON THE SAME LEVEL AND WITHIN 7.5 M (25 FT) OF THE EQUIPMENT'S REQUIRED SPACE.

### FOR OTHER THAN DWELLING UNITS:(210.8B)

ALL 125-VOLT THROUGH 250-VOLT RECEPTACLES SUPPLIED BY SINGLE-PHASE BRANCH CIRCUITS RATED 150 VOLTS OR LESS TO GROUND, 50 AMPS OR LESS.

OR

ALL RECEPTACLES SUPPLIED BY THREE-PHASE BRANCH CIRCUITS RATED BY 150-VOLTS OR LESS TO GROUND, 100 AMPS OR LESS, INSTALLED IN THE LOCATIONS SPECIFIED IN 210.8B(1) THROUGH B(12) AND SHALL HAVE GFCI PROTECTION FOR

- KITCHENS OR AREAS WITH A SINK AND PERMANENT PROVISIONS FOR EITHER FOOD PREP. OR COOKING 210.8B(2)
- OUTDOORS 210.8B(4)

### HIRED PE NOTES:

THE CONTRACTOR SHALL BE AWARE THERE MAY BE NOTES ON THESE PLANS AND IN THE SPECIFICATIONS THAT REQUIRE THE CONTRACTOR TO HIRE A PROFESSIONAL ENGINEER TO SIGN AND SEAL VARIOUS STUDIES OR SUBMIT FINAL SHOP DRAWINGS FOR PERMIT PURPOSES. EXAMPLES ARE FIRE ALARM, SHORT CIRCUIT STUDY, ARC FLASH STUDY, COORDINATION STUDY, ETC. THE PROFESSIONAL ENGINEER SHALL BE LICENSED TO PROVIDE ENGINEERING SERVICES IN THE JURISDICTION THE PROJECT IS LOCATED. THE CONTRACTOR SHALL PROVIDE THE PROFESSIONAL ENGINEERS QUALIFICATIONS AS PART OF THE BID SUBMISSION.

### NEC 110-22

EACH DISCONNECTING MEANS SHALL BE LEGIBLY MARKED TO INDICATE ITS PURPOSE UNLESS LOCATED AND ARRANGED SO THE PURPOSE IS EVIDENT. THE MARKINGS SHALL BE OF SUFFICIENT DURABILITY TO WITHSTAND THE ENVIRONMENT INVOLVED.

WHERE CIRCUIT BREAKERS OR FUSES ARE APPLIED IN COMPLIANCE WITH SERIES COMBINATION RATINGS MARKED ON THE EQUIPMENT BY THE MANUFACTURE, THE EQUIPMENT ENCLOSURE(S) SHALL BE LEGIBLY MARKED IN THE FIELD TO INDICATE THE EQUIPMENT HAS BEEN APPLIED WITH A SERIES COMBINATION RATINGS.

THE MARKINGS SHALL BE READILY VISIBLE AND STATE THE INFORMATION LISTED ABOVE.

CAUTION - SERIES COMBINATION SYSTEM

RATED ___ AMPERES. IDENTIFIED

REPLACEMENT COMPONENTS REQUIRED.

### PROJECT NOTES:

THE CONTRACTOR SHALL RECEIVE AND REVIEW ALL OF THE PROJECTS DRAWINGS AND SPECIFICATIONS SUCH AS ARCHITECTURAL, STRUCTURAL, HVAC, ELECTRICAL, PLUMBING, FIRE ALARM, SPRINKLER, SITE, ETC. TO UNDERSTAND THE FULL SCOPE OF WORK. FAILURE TO RECEIVE AND REVIEW THOSE PLANS DURING BIDDING WILL RESULT IN THE DENIAL OF EXTRA'S.

### NEC 110-16

ALL SWITCHBOARDS (EACH SECTION), PANELBOARDS, ENCLOSED BREAKERS/SWITCHES, ATS'S, TRANSFORMERS, MOTOR STARTES, CONTRACTORS, INDUSTRIAL CONTROL PANELS, AND MOTOR CONTROL CENTERS SHALL BE FIELD MARKED TO WARN QUALIFIED PERSONS OF POTENTIAL ELECTRIC ARC FLASH HAZARDS. THE MARKING SHALL BE LOCATED IN A CLEARLY VISIBLE LOCATION TO QUALIFIED PERSON BEFORE EXAMINATION, ADJUSTMENT, SERVICING, OR MAINTENANCE OF THE EQUIPMENT.

## GENERAL NOTES

THE CONTRACTOR SHALL CONFORM TO THE LATEST BUILDING CODES:

2021 NEW JERSEY INTERNATIONAL BUILDING CODE

NEC 2020 WITH NEW JERSEY AMENDMENTS

## APPLICABLE CODES


| | |
|---|---|
| E-100 | GENERAL NOTES AND SPECIFICATIONS |
| E-200 | ADMIN & CIVIL- ELECTRICAL REFLECTED CEILING PLAN |
| E-201 | ADMIN & CIVIL- REFLECTED CEILING ATTIC PLANS |
| E-202 | ADMIN & CIVIL- ELECTRICAL GROUND FLOOR PLANS |
| E-203 | ADMIN & CIVIL- ELECTRICAL ATTIC PLANS |
| E-204 | ADMIN & CIVIL- ELECTRICAL DETAILS AND SCHEDULE |
| E-205 | ADMIN & CIVIL- ELECTRICAL SINGLE LINE DIAGRAM & NOTES |
| E-301 | ADMIN & CIVIL- LIGHTING CONTROLS AND LAYOUT |
| E-302 | ADMIN & CIVIL- LIGHTING CONTROLS AND LAYOUT |
| E-303 | ADMIN & CIVIL- LIGHTING CONTROLS AND LAYOUT |
| E-304 | ADMIN & CIVIL- LIGHTING CONTROLS AND LAYOUT |
| E-305 | ADMIN & CIVIL- LIGHTING CONTROLS AND LAYOUT |


## DRAWING LIST

BYRAM MUNCIPAL BUILDING
ADMINISTRATIVE / CIVIL
10 MANSFIELD DRIVE,
LOTS 16.01 - BLOCK 365
BYRAM TOWNSHIP
SUSSEX COUNTY, NEW JERSEY


THE NADER GROUP, LLC
Architects, Engineers, & Surveyors
111 Mill Street
Hackettstown, NJ 07840
p.908.850.3500 | f.908.441.5803
e. wassim.nader@thenadergroup.com
www.naderhouseofdesign.com

BRIAN D. TANNENHAUS


ISSUED FOR BID
NOT FOR CONSTRUCTION
08/01/2023

NJ PROFESSIONAL ENGINEER
NO. GE 45801
DATE: XX/XX/XXXX


BD engineering
NJ CERTIFICATE OF AUTHORIZATION – 24GA28116100
BD Engineering, LLC 732–886–5432
44 Main Street, Farmingdale, NJ 07727
www.bd-engineering.com Project No. 210133


| No. | DATE | REVISION |
|---|---|---|
| 00 | 08/01/23 | BID SET |

DRW BY: AW
SCALE: AS NOTED
DATE: JUNE 16, 2023
JOB No. 18.TNG029
DRAWING Name
GENERAL NOTES AND SPECIFICATIONS
DRAWING No.
E-100

8/4/2023 2:44 PM

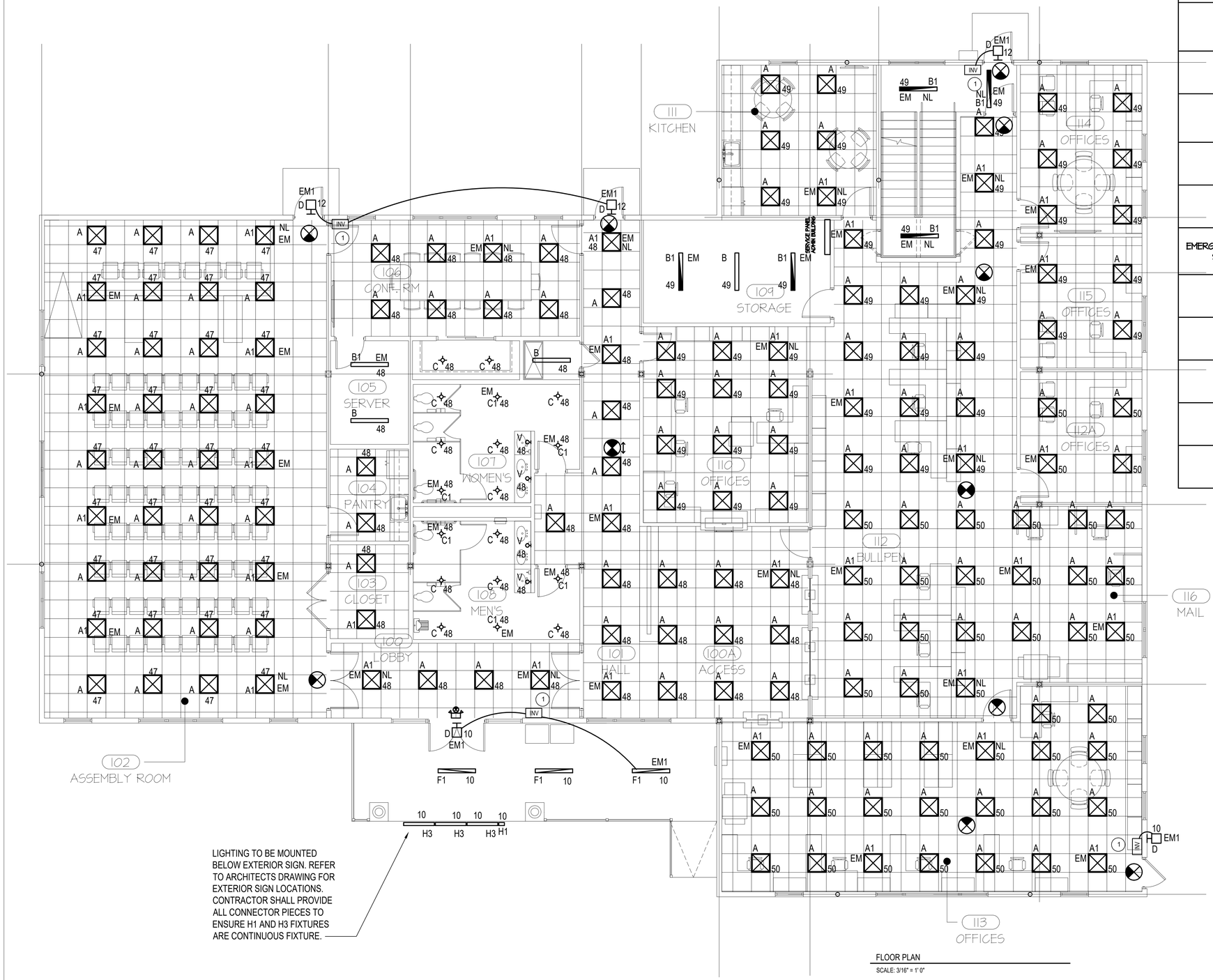


LIGHTING TO BE MOUNTED BELOW EXTERIOR SIGN. REFER TO ARCHITECTS DRAWING FOR EXTERIOR SIGN LOCATIONS. CONTRACTOR SHALL PROVIDE ALL CONNECTOR PIECES TO ENSURE H1 AND H3 FIXTURES ARE CONTINUOUS FIXTURE.

FLOOR PLAN

SCALE: 3/16" = 1' 0"

## LIGHTING FIXTURE SCHEDULE

| TYPE | FIXTURE | MANUFACTURER | LUMENS | WATTAGE | REMARKS |
|---|---|---|---|---|---|
| A | 22-OEVHP-LED-4000L-DIM10-MVOLT-35K/40K/50K-85 | ORACLE LIGHTING BY ELITE | 4554 | 32 | 22FK OPTIONAL |
| A1 | 22-OEVHP-LED-4000L-DIM10-MVOLT-35K/40K/50K-85 -O-EMG LED -20W | ORACLE LIGHTING BY ELITE | 4554 | 32 | 22FK OPTIONAL |
| B | OLS-CM-LED-4-REC-W4-L6-1250L-DIM10-MVOLT-35K-85-WH | ORACLE LIGHTING BY ELITE | 1250L | 42 | |
| B1 | OLS-CM-LED-4-REC-W4-L6-1250L-DIM10-MVOLT-35K-85-WH-O-EMG LED -20W | ORACLE LIGHTING BY ELITE | 1250L | 42 | |
| C | HH4-4501 | MAX LUME BY ELITE | 1500 | 20 | |
| C1 | HH4-4501-O-EMG LED -20W | MAX LUME BY ELITE | 1500 | 20 | |
| EMERGENCY EXIT SIGN | ELX-602, WITH MINIMUM 90 MINUTE BATTERY BACKUP | MAX LUME BY ELITE | - | 3-5W | |
| F1 | 4-OWVS1-LED-4000L/5000L/6000L-DIM10-MVOLT-35K/40K/50K-85-O-LED-10W | ORACLE LIGHTING BY ELITE | 6268 | 46W | |
| V | 2-OVL-LED-2000L-DIM10-MVOLT-30K/40K/50K-90 | ORACLE LIGHTING BY ELITE | 2155 | 26W | |
| D | OMS-FC-303-LED-6000L-DIM10-MVOLT-40K-XX-O-LED-PHC | ORACLE LIGHTING BY ELITE | 6000 | 40W | |
| H1 | NANO-80-0.2-30-25X35-TS-LARGE: ARMORMNT1422-DRVW244610P | ACOLTYE | 355 | 3 | |
| H3 | NANO-80-0.2-30-25X35-TS-LARGE: ARMORMNT1422-DRVW244610P | ACOLYTE | 355 | 3 | |

## DRAWING NOTES:

1. INVERTER FOR EMERGENCY LIGHTING WATTAGE TO BE MINIMUM REQUIRED TO SUPPORT WATTAGE OF LIGHTS CONNECTED TO. SEE PLANS FOR LIGHTS INVERTERS ARE CONNECTED TO.

## GENERAL NOTES:

1. LIGHTING LAYOUT PROVIDED BY ARCHITECT.
2. LIGHT FIXTURES WITH LABEL "EM" SHALL BE PROVIDED WITH INTERNAL BATTERY BACKUP. CONTRACTOR SHALL PROVIDE LARGEST BATTERY BACKUP AVAILABLE IN FIXTURE.
3. LIGHT FIXTURES WITH LABEL "EM1" SHALL BE PROVIDED WITH REMOTE INVERTER. REFER TO FLOOR PLANS FOR INVERTER LOCATIONS AND REFER TO DRAWING NOTES FOR ADDITIONAL INFORMATION.

# BYRAM MUNCIPAL BUILDING
## ADMINISTRATIVE / CIVIL
10 MANSFIELD DRIVE
LOTS 16.01 - BLOCK 365
BYRAM TOWNSHIP
SUSSEX COUNTY, NEW JERSEY


THE NADER GROUP, LLC
Architects, Engineers, & Surveyors
111 Mill Street
Hackettstown, NJ 07840
p.908.850.3500 | f.908.441.5803
e. wassim.nader@thenadergroup.com
www.naderhouseofdesign.com

BRIAN D. TANNENHAUS


ISSUED FOR BID
NOT FOR CONSTRUCTION
08/01/2023

NJ PROFESSIONAL ENGINEER
NO. GE 45801

DATE: XX/XX/XXXX


BD engineering
NJ CERTIFICATE OF AUTHORIZATION – 24GA28116100
BD Engineering, LLC
44 Main Street, Farmingdale, NJ 07727
732-886-5432
www.bd-engineering.com Project No. 210133


| No. | DATE | REVISION |
|---|---|---|
| 00 | 08/01/23 | BID SET |

DRW BY: AW
SCALE: AS NOTED
DATE: JUNE 16, 2023
JOB No. 18.TNG029
DRAWING Name
ADMIN & CIVIL-ELECTRICAL REFLECTED CEILING PLAN
DRAWING No.
E-200

8/4/2023 2:44 PM

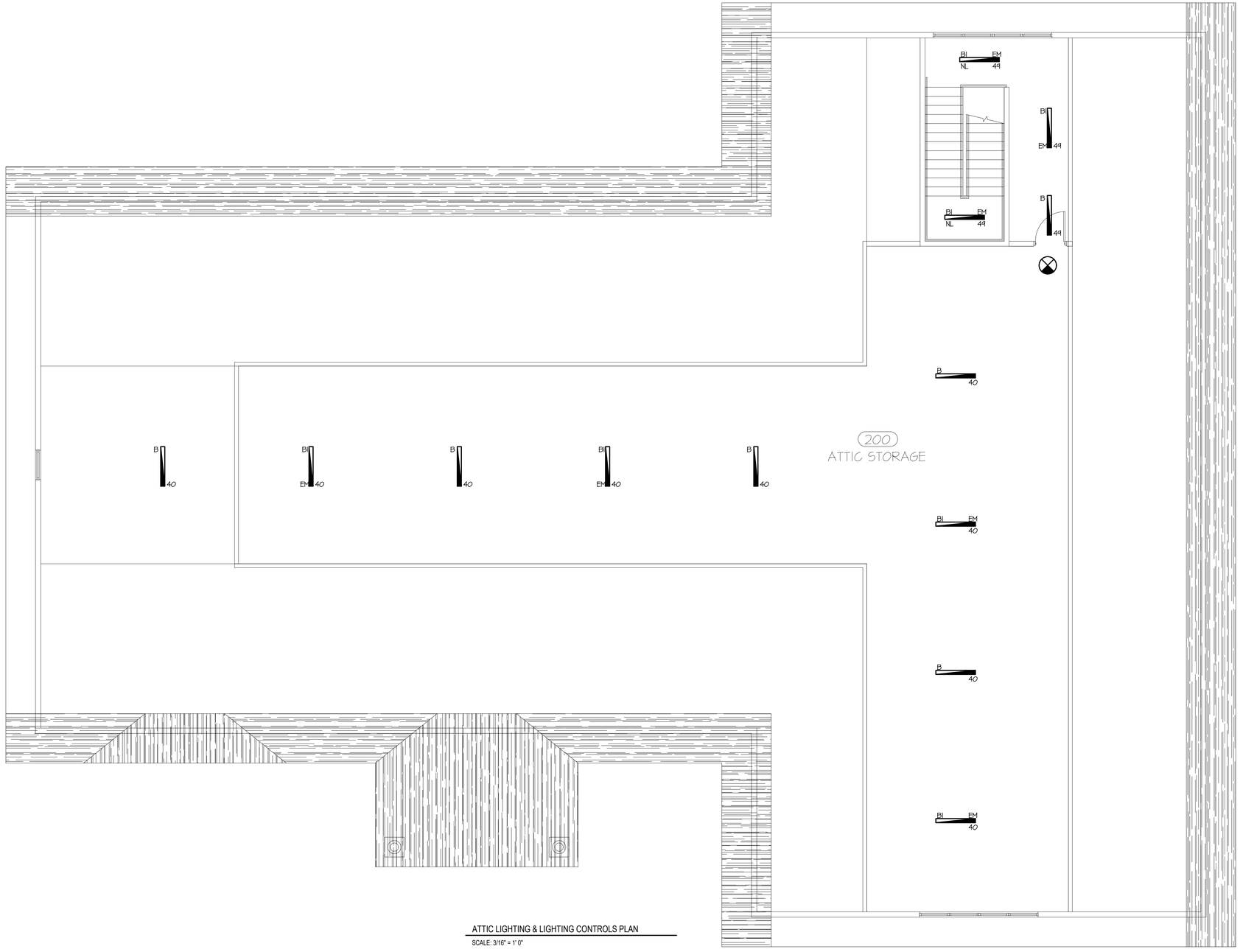


ATTIC LIGHTING & LIGHTING CONTROLS PLAN

SCALE: 3/16" = 1' 0"

## GENERAL NOTES:

1. LIGHTING LAYOUT PROVIDED BY ARCHITECT.
2. LIGHT FIXTURES WITH LABEL "EM" SHALL BE PROVIDED WITH INTERNAL BATTERY BACKUP. CONTRACTOR SHALL PROVIDE LARGEST BATTERY BACKUP AVAILABLE IN FIXTURE.

# BYRAM MUNCIPAL BUILDING
## ADMINISTRATIVE / CIVIL
10 MANSFIELD DRIVE
LOTS 16.01 - BLOCK 365
BYRAM TOWNSHIP
SUSSEX COUNTY, NEW JERSEY

THE NADER GROUP, LLC
Architects, Engineers, & Surveyors
111 Mill Street
Hackettstown, NJ 07840
p.908.850.3500 | f.908.441.5803
e. wassim.nader@thenadergroup.com
www.naderhouseofdesign.com

BRIAN D. TANNENHAUS

ISSUED FOR BID
NOT FOR CONSTRUCTION
08/01/2023

NJ PROFESSIONAL ENGINEER
NO. GE 45801

DATE: XX/XX/XXXX

BD engineering
NJ CERTIFICATE OF AUTHORIZATION – 24GA28116100
BD Engineering, LLC
44 Main Street, Farmingdale, NJ 07727
732-886-5432
www.bd-engineering.com Project No. 210133

| No. | DATE | REVISION |
|---|---|---|
| 00 | 08/01/23 | BID SET |

DRW BY: AW
SCALE: AS NOTED
DATE: JUNE 16, 2023
JOB No. 18.TNG029
DRAWING Name: ADMIN & CIVIL-REFLECTED CEILING ATTIC PLANS
DRAWING No. E-201

8/4/2023 2:44 PM

## DRAWING NOTES:

1. PROVIDE FIRE ALARM (FA) SYSTEM MONITOR MODULES (MM OR AIM) & CONTROL MODULES (CM OR AOM) FOR TWO-WAY COMMUNICATION BETWEEN FIRE ALARM CONTROL PANEL (FACP) AND NON-WATER-BASED (WATERLESS) AUTOMATIC FIRE PROTECTION SYSTEM CONTROL PANEL (3M NOVEC OR APPROVED EQUAL BY OTHERS) TO MONITOR: (1) ALARM, (2) TROUBLE AND (3) SUPERVISORY SIGNALS. PROVIDE ALL FA MODULES CONNECTED TO THE FA SYSTEM AND ALL ASSOCIATED PROGRAMMING OF FACP. ALL SCOPE ASSOCIATED WITH THE WATERLESS SYSTEM, BEYOND THAT DESCRIBED HEREIN IS BY OTHERS. (TYPICAL FOR LOCATIONS AS NOTED ON PLANS.

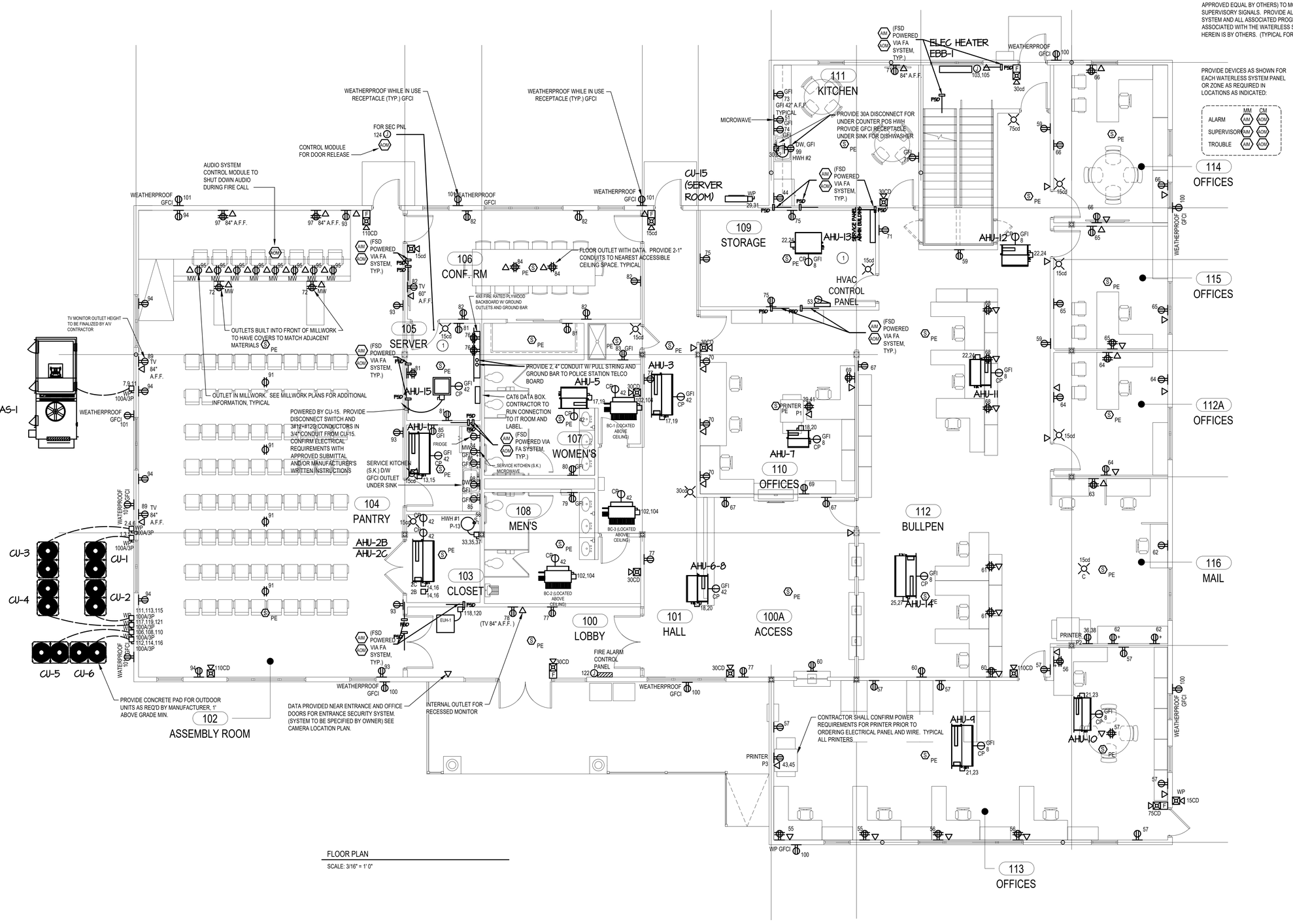


FLOOR PLAN

SCALE: 3/16" = 1' 0"

# BYRAM MUNCIPAL BUILDING ADMINISTRATIVE / CIVIL

10 MANSFIELD DRIVE
LOTS 16.01 - BLOCK 365
BYRAM TOWNSHIP
SUSSEX COUNTY, NEW JERSEY


THE NADER GROUP, LLC
Architects, Engineers, & Surveyors
111 Mill Street
Hackettstown, NJ 07840
p.908.850.3500 | f.908.441.5803
e. wassim.nader@thenadergroup.com
www.naderhouseofdesign.com

BRIAN D. TANNENHAUS

BD engineering
NJ CERTIFICATE OF AUTHORIZATION – 24GA28116100
BD Engineering, LLC
44 Main Street, Farmingdale, NJ 07727
www.bd-engineering.com Project No. 210133


ISSUED FOR BID
NOT FOR CONSTRUCTION
08/01/2023

NJ PROFESSIONAL ENGINEER
NO. GE 45801

DATE: XX/XX/XXXX

| No. | DATE | REVISION |
|---|---|---|
| 00 | 08/01/23 | BID SET |

DRW BY: AW
SCALE: AS NOTED
DATE: JUNE 16, 2023
JOB No. 18.TNG029
DRAWING Name

ADMIN & CIVIL-ELECTRICAL GROUND FLOOR PLANS

DRAWING No.

E-202

8/4/2023 2:44 PM

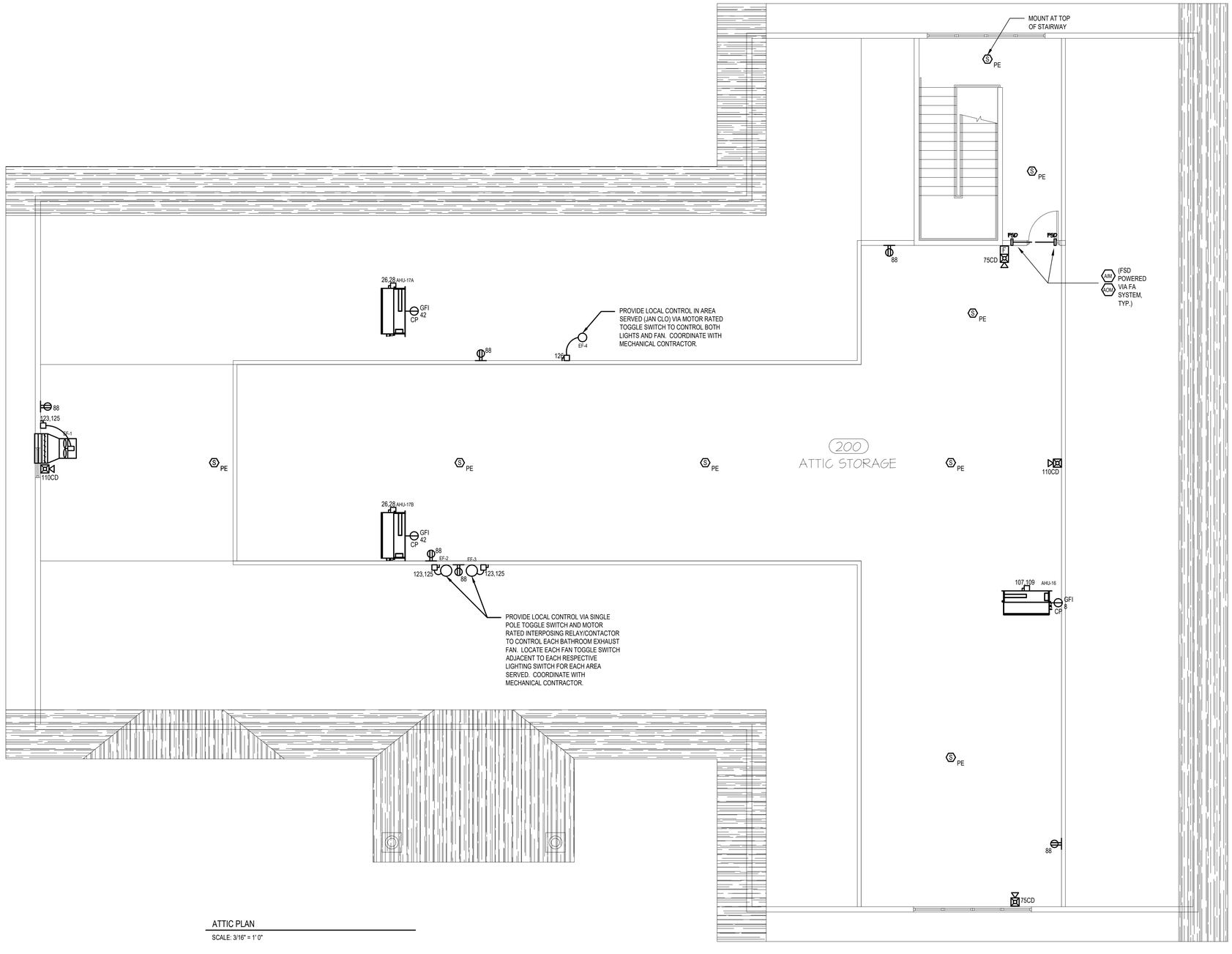


ATTIC PLAN

SCALE: 3/16" = 1' 0"

# BYRAM MUNCIPAL BUILDING
## ADMINISTRATIVE / CIVIL
10 MANSFIELD DRIVE,
LOTS 16.01 - BLOCK 365
BYRAM TOWNSHIP
SUSSEX COUNTY, NEW JERSEY


THE NADER GROUP, LLC

Architects, Engineers, & Surveyors

111 Mill Street
Hackettstown, NJ 07840

p.908.850.3500 | f.908.441.5803
e. wassim.nader@thenadergroup.com

www.naderhouseofdesign.com

BRIAN D. TANNENHAUS


ISSUED FOR BID
NOT FOR CONSTRUCTION
08/01/2023

NJ PROFESSIONAL ENGINEER
NO. GE 45801

DATE: XX/XX/XXXX


BD engineering

NJ CERTIFICATE OF AUTHORIZATION – 24GA28116100
BD Engineering, LLC
44 Main Street, Farmingdale, NJ 07727
www.bd-engineering.com Project No. 210133


| No. | DATE | REVISION |
|---|---|---|
| 00 | 08/01/23 | BID SET |

DRW BY: AW

SCALE: AS NOTED

DATE: JUNE 16, 2023

JOB No. 18.TNG029

DRAWING Name

ADMIN &
CIVIL-ELECTRICAL
ATTIC PLANS

DRAWING No.

E-203

8/4/2023 2:44 PM

**RISER NOTES:**

1. RATING OF CIRCUIT BREAKERS SHALL BE COORDINATED WITH UTILITY.
2. GROUNDING ELECTRODES AND GROUNDING ELECTRODE CONDUCTORS AS FOLLOWS

   -1#1/0 TO GROUNDING SYSTEM AS SHOWN IN SL DIAGRAM.

**ELECTRICAL NOTES:**

1. DRAWINGS ARE DIAGRAMMATIC AND DO NOT SHOW ALL OFFSETS OR BOXES NOR ACTUAL CONDUIT ROUTING.
2. ALL OUTLET LOCATIONS SHALL BE VERIFIED WITH OWNER BEFORE ROUGH-IN.
3. ALL ELECTRICAL EQUIPMENT SHALL BE U.L. APPROVED AND SHALL BE COMMERCIAL GRADE.
4. MECHANICAL CONTRACTOR AND ELECTRICAL CONTRACTOR SHALL COORDINATE THEIR WORK AND VERIFY AVAILABLE VOLTAGE BEFORE ORDERING EQUIPMENT. MECHANICAL CONTRACTOR SHALL SUPPLY ELECTRICAL CONTRACTOR WITH WIRING AND PROTECTIVE DEVICE INFORMATION AS SOON AS POSSIBLE AFTER SUBMISSION OF SHOP DRAWINGS. ELECTRICAL CONTRACTOR SHALL VERIFY PROPER WIRING SIZE, CIRCUIT PROTECTION TYPE, AND CIRCUIT AMPACITY PRIOR TO RUNNING CIRCUITS OR PULLING WIRE.
5. ALL EMERGENCY AND EXIT LIGHTS SHALL BE CONNECTED TO NON-SWITCHED SIDE OF THE ASSOCIATED CIRCUIT.
6. MOTOR HEATER ELEMENTS SHALL BE PROVIDED BY EC AS PER MOTOR NAMEPLATE FLA & AS REQUIRED.
7. ELECTRICAL CONTRACTOR PROVIDE BLDG GROUND LOOP AS PER NEC AND LOCAL BLDG CODE.
8. ELECTRICAL CONTRACTOR TO PROVIDE EQUIPMENT GROUND AS PER NEC AND LOCAL BLDG CODE.
9. ALL CIRCUITS SHALL CONTAIN AN INSULATED COPPER GROUND CONDUCTOR GROUND PER NEC.
10. CONNECT RECESSED LIGHTING FIXTURES TO JUNCTION BOX IN SPACE ABOVE SUSPENDED CEILING USING GREENFIELD FLEXIBLE CONDUIT. 6' LENGTH MAXIMUM. THE MAXIMUM NUMBER OF LIGHTING FIXTURES THAT MAY BE CONNECTED TO ONE BOX IS THREE.
11. WIRING WITHIN PARTITIONS AND IN SPACE ABOVE SUSPENDED CEILING MAY BE METAL CLAD (AC) UNLESS PROHIBITED BY LOCAL CODES. EXPOSED WIRING SHALL BE IN CONDUIT ¾" TRADE SIZE, MINIMUM.
12. ALL FLUORESCENT BALLASTS SHALL BE ELECTRONIC TYPE.

**WIRING TABLE NOTES:**

1. THE PURPOSE OF THESE TABLES IS TO INDICATE THE BRANCH CIRCUIT WIRING REQUIRED BASED ON THE RATING OF THE BRANCH CIRCUIT OVERCURRENT PROTECTION AND THE RUN LENGTH.
2. FOR FEEDER WIRING, SEE THE ONE-LINE DIAGRAM LOCATED ON POLICE BUILDING.
3. THE TABLE SHOW THE REQUIRED BRANCH CIRCUIT WIRING, ADJUST TO COMPENSATE FOR VOLTAGE DROP, ADDITIONALLY, IF THE NUMBER OF CURRENT-CARRYING CONDUCTORS IN A CONDUIT EXCEEDS THREE REDUCE THE ALLOWABLE AMPACITY OF EACH CONDUCTOR IN ACCORDANCE WITH THE 'WIRE' FILL.
4. USE THESE TABLES FOR BRANCH CIRCUIT WIRING RUN IN CONDUIT OR WIREWAY. FOR WIRING IN WIREWAY, NO DERATING FOR WIRE FILL IS REQUIRED IF THE WIRE FILL DOES NOT EXCEED 20% OF THE CROSS SECTIONAL AREA AND THE NUMBER OF WIRES DOES NOT EXCEED 30, AS REQUIRED BY NEC.

TABLE 1

| 120-VOLT 1 PHASE CIRCUIT | | |
|---|---|---|
| OVERCURRENT PROTECTION | MAXIMUM ONE-WAY RUN LENGTH | WIRING (SEE NOTE 3) |
| 20A, 1 POLE | 65 FT. | 2#12, 1#12GND |
| | 100 FT. | 2#10, 1#10GND |
| | 160 FT. | 2#8, 1#8GND |
| | 250 FT. | 2#6, 1#6GND |
| 30A, 1 POLE | 70 FT. | 2#10, 1#10GND |
| | 110 FT. | 2#8, 1#8GND |
| | 165 FT. | 2#6, 1#6GND |
| | 250 FT. | 2#4, 1#4GND |
| 40A, 1 POLE | 80 FT. | 2#8, 1#10GND |
| | 125 FT. | 2#6, 1#8GND |
| | 190 FT. | 2#4, 1#6GND |
| | 280 FT. | 2#2, 1#4GND |
| 50A, 1 POLE | 65 FT. | 2#8, 1#10GND |
| | 100 FT. | 2#6, 1#8GND |
| | 150 FT. | 2#4, 1#6GND |
| | 225 FT. | 2#2, 1#4GND |
| 60A, 1 POLE | 85 FT. | 2#6, 1#10GND |
| | 125 FT. | 2#4, 1#8GND |
| | 190 FT. | 2#2, 1#6GND |
| | 340 FT. | 2#2/0. 1#2GND |
| 70A, 1 POLE | 160 FT. | 2#2. 1#8GND |
| | 290 FT. | 2#2/0. 1#4GND |

TABLE 2

| 208-VOLT 1 PHASE BRANCH CIRCUIT | | |
|---|---|---|
| OVERCURRENT PROTECTION | MAXIMUM ONE-WAY RUN LENGTH | WIRING (SEE NOTE 3) |
| 20A, 2 POLE | 115 FT. | 2#12, 1#12GND |
| | 180 FT. | 2#10, 1#10GND |
| | 280 FT. | 2#8, 1#8GND |
| 30A, 2 POLE | 120 FT. | 2#10, 1#10GND |
| | 185 FT. | 2#8, 1#8GND |
| | 290 FT. | 2#6, 1#6GND |
| 40A, 2 POLE | 140 FT. | 2# 8, #10GND |
| | 215 FT. | 2# 6, 1#8GND |
| | 325 FT. | 2# 4, 1#6GND |
| | 490 FT. | 2# 2, 1#4GND |
| 50A, 2 POLE | 110 FT. | 2# 8, 1#10GND |
| | 175 FT. | 2# 6, 1#8GND |
| | 260 FT. | 2# 4, 1#6GND |
| | 390 FT. | 2# 2, 1#4GND |
| 60A, 2 POLE | 145 FT. | 2# 6, 1#10GND |
| | 215 FT. | 2# 4, 1#8GND |
| | 325 FT. | 2# 2, 1#6GND |
| | 590 FT. | 2# 2/0. 1#2GND |
| 70A, 2 POLE | 280 FT. | 2#2. 1#8GND |
| | 505 FT. | 2#2/0. 1#4GND |

TABLE 3

| 208-VOLT 3 PHASE BRANCH CIRCUIT | | |
|---|---|---|
| OVERCURRENT PROTECTION | MAXIMUM ONE-WAY RUN LENGTH | WIRING (SEE NOTE 3) |
| 20A, 3 POLE | 130 FT. | 3#12, 1#12GND |
| | 205 FT. | 3#10, 1#10GND |
| | 320 FT. | 3#8, 1#8GND |
| 30A, 3 POLE | 135 FT. | 3#10, 1#10GND |
| | 215 FT. | 3#8, 1#8GND |
| | 335 FT. | 3#6, 1#6GND |
| 40A, 3 POLE | 160 FT. | 3#8, #10GND |
| | 250 FT. | 3#6, 1#8GND |
| | 375 FT. | 3#4, 1#6GND |
| | 565 FT. | 3#2, 1#4GND |
| 50A, 3 POLE | 130 FT. | 3#8, 1#10GND |
| | 200 FT. | 3#6, 1#8GND |
| | 300 FT. | 3#4, 1#6GND |
| | 450 FT. | 3#2, 1#4GND |
| 60A, 3 POLE | 165 FT. | 3#6, 1#10GND |
| | 250 FT. | 3#4, 1#8GND |
| | 375 FT. | 3#2, 1#6GND |
| | 680 FT. | 3#2/0. 1#2GND |
| 70A, 3 POLE | 320 FT. | 3#2. 1#8GND |
| | 585 FT. | 3#2/0. 1#4GND |

## PANEL-ADMIN BUILDING

208/120 VOLT, 3 PHASE, 4 WIRE, 800 AMP

MAIN DEVICE: N/A  MOUNTING: SURFACE  MIN AIC: 20,538 AMPS

SUB FEED CB: N/A  LOCATION: REAR HALLWAY

| CKT # | DESCRIPTION | KVA | CB/P | FEEDER | ? | FEEDER | CB/P | KVA | DESCRIPTION | CKT # |
|---|---|---|---|---|---|---|---|---|---|---|
| 1 | CU-1 | 15.9 | 70/3 | 3#4, #8GR, 1-1/4" | A | 3#4, #8GR, 1-1/4" | 70/3 | 15.9 | CU-3 | 2 |
| 3 | - | - | - | - | B | - | - | - | - | 4 |
| 5 | - | - | - | - | C | - | - | - | - | 6 |
| 7 | DOAS-1 | 31.8 | 90/3 | 3#2, #8GR, 1-1/4" | A | 2#12, #12GR, 3/4" | 20/1 | 1.5 | CONDENSATE PUMPS | 8 |
| 9 | - | - | - | - | B | 2#12, #12GR, 3/4" | 20/1 | 0.3 | EXTERIOR LIGHTS (SOUTH) | 10 |
| 11 | - | - | - | - | C | 2#12, #12GR, 3/4" | 20/1 | 0.2 | EXTERIOR LIGHTS (NORTH) | 12 |
| 13 | AHU1 | 1.6 | 15/2 | 2#12, #12GR, 3/4" | A | 2#12, #12GR, 3/4" | 15/2 | 1.8 | AHU2B, AHU2C | 14 |
| 15 | - | - | - | - | B | - | - | - | - | 16 |
| 17 | AHU3, AHU5 | 1.5 | 15/2 | 2#12, #12GR, 3/4" | C | 2#12, #12GR, 3/4" | 15/2 | 1.5 | AHU6-8, AHU7 | 18 |
| 19 | - | - | - | - | A | - | - | - | - | 20 |
| 21 | AHU9, AHU10 | 1.2 | 15/2 | 2#12, #12GR, 3/4" | B | 2#12, #12GR, 3/4" | 15/2 | 2.2 | AHU11, AHU12, AHU13-4 | 22 |
| 23 | - | - | - | - | C | - | - | - | - | 24 |
| 25 | AHU14 | 0.6 | 15/2 | 2#12, #12GR, 3/4" | A | 2#12, #12GR, 3/4" | 15/2 | 1.8 | AHU-17A, AHU-17B | 26 |
| 27 | - | - | - | - | B | - | - | - | - | 28 |
| 29 | CU-15 | 4.0 | 25/2 | 2#10, #10GR, 3/4" | C | 3#10, #10GR, 3/4" | 30/2 | 4.5 | POS HWH BREAK ROOM | 30 |
| 31 | - | - | - | - | A | - | - | - | - | 32 |
| 33 | HWH-1 | 10.0 | 35/3 | 3#8, #10GR, 1" | B | 2#12, #12GR, 3/4" | 20/1 | 1.0 | S. K. MICROWAVE | 34 |
| 35 | - | - | - | - | C | 2#12, #12GR, 3/4" | 20/2 | 1.0 | PRINTER P2 | 36 |
| 37 | - | - | - | - | A | - | - | - | - | 38 |
| 39 | PRINTER P1 | 1.0 | 20/2 | 2#12, #12GR, 3/4" | B | 2#12, #12GR, 3/4" | 20/1 | 0.5 | ATTIC LEVEL LIGHTING | 40 |
| 41 | - | - | - | - | C | 2#12, #12GR, 3/4" | 20/1 | 1.7 | CONDENSATE PUMPS | 42 |
| 43 | PRINTER P3 | 1.0 | 20/2 | 2#12, #12GR, 3/4" | A | 2#12, #12GR, 3/4" | 20/1(GFCI) | 0.5 | KITCHEN FRIDGE-GFI | 44 |
| 45 | - | - | - | - | B | 2#12, #12GR, 3/4" | 20/1(GFCI) | 0.5 | SERVICE KITCHEN FRIDGE | 46 |
| 47 | LIGHTS | 1.2 | 20/1 | 2#12, #12GR, 3/4" | C | 2#12, #12GR, 3/4" | 20/1 | 1.7 | LIGHTS | 48 |
| 49 | LIGHTS | 1.7 | 20/1 | 2#12, #12GR, 3/4" | A | 2#12, #12GR, 3/4" | 20/1 | 1.5 | LIGHTS | 50 |
| 51 | BREAK RM MICROWAVE | 1.0 | 20/1 | 2#12, #12GR, 3/4" | B | 2#12, #12GR, 3/4" | 20/1 | | SPARE | 52 |
| 53 | HVAC CONTROL PANEL | 0.5 | 20/1 | 2#12, #12GR, 3/4" | C | 2#12, #12GR, 3/4" | 20/1 | | SPARE | 54 |
| 55 | OFFICE QUAD RECEPTACLES | 0.7 | 20/1 | 2#12, #12GR, 3/4" | A | 2#12, #12GR, 3/4" | 20/1 | 1.1 | OFFICE QUAD RECEPTACLES | 56 |
| 57 | OPEN OFFICE RECEPTACLES | 1.4 | 20/1 | 2#12, #12GR, 3/4" | B | 2#12, #12GR, 3/4" | 20/1 | 0.1 | P-13 | 58 |
| 59 | CORR/OFFICE RECEPTACLES | 0.5 | 20/1 | 2#12, #12GR, 3/4" | C | 2#12, #12GR, 3/4" | 20/1 | 0.7 | OFFICE RECEPTACLES | 60 |
| 61 | OFFICE FLOORBOX QUADS | 0.7 | 20/1 | 2#12, #12GR, 3/4" | A | 2#12, #12GR, 3/4" | 20/1 | 0.5 | OFFICE RECEPTACLES | 62 |
| 63 | OFFICE QUAD RECEPTACLE | 0.4 | 20/1 | 2#12, #12GR, 3/4" | B | 2#12, #12GR, 3/4" | 20/1 | 0.9 | PRIVATE OFFICE RECEPTACLES | 64 |
| 65 | PRIVATE OFFICE RECEPTACLES | 0.9 | 20/1 | 2#12, #12GR, 3/4" | C | 2#12, #12GR, 3/4" | 20/1 | 0.9 | OFFICE RECEPTACLES | 66 |
| 67 | LOBBY/OFFICE RECEPTACLES | 0.5 | 20/1 | 2#12, #12GR, 3/4" | A | 2#12, #12GR, 3/4" | 20/1 | 1.1 | OFFICE FLOORBOX QUADS | 68 |
| 69 | OFFICE RECEPTACLES | 0.5 | 20/1 | 2#12, #12GR, 3/4" | B | 2#12, #12GR, 3/4" | 20/1 | 0.5 | OFFICE RECEPTACLES | 70 |
| 71 | BREAK RM & CORR RECEPT | 0.5 | 20/1 | 2#12, #12GR, 3/4" | C | 2#12, #12GR, 3/4" | 20/1 | 0.7 | TOWN HALL MW QUAD REC | 72 |
| 73 | KIT. GFI RECEPTACLES | 1.0 | 20/1 | 2#12, #12GR, 3/4" | A | 2#12, #12GR, 3/4" | 20/1 | 1.5 | KIT. GFI RECEPTACLES | 74 |
| 75 | TELCO RM RECEPTACLES | 0.5 | 20/1 | 2#12, #12GR, 3/4" | B | 2#12, #12GR, 3/4" | 20/1 | 0.7 | TELCO RM QUADS | 76 |
| 77 | CORR. VEST, LOBBY RECEPT | 0.7 | 20/1 | 2#12, #12GR, 3/4" | C | 2#12, #12GR, 3/4" | 20/1 | 0.5 | TV RECEPTACLE VESTIBULE | 78 |
| 79 | BATH GFI RECEPTACLE | 1.0 | 20/1 | 2#12, #12GR, 3/4" | A | 2#12, #12GR, 3/4" | 20/1 | 1.0 | BATH GFI RECEPTACLE | 80 |
| 81 | CONF RM CLOSETS RECEPT | 0.9 | 20/1 | 2#12, #12GR, 3/4" | B | 2#12, #12GR, 3/4" | 20/1 | 1.1 | CONF. RM.RECEPTACLES | 82 |
| 83 | JAN CLOSET GFI RECEPTACLE | 0.2 | 20/1 | 2#12, #12GR, 3/4" | C | 2#12, #12GR, 3/4" | 20/1 | 0.7 | CONF RM FLR QUAD RECEPT | 84 |
| 85 | S.K. GFI COUNTER RECEPT | 1.5 | 20/1 | 2#12, #12GR, 3/4" | A | 2#12, #12GR, 3/4" | 20/1 | 1.5 | S.K. GFI COUNTER RECEPT | 86 |
| 87 | SPARE | - | 20/1 | - | B | 2#12, #12GR, 3/4" | 20/1 | 1.1 | ATTIC RECEPTACLES | 88 |
| 89 | REC-TV'S ASSEMBLY | 1.0 | 20/1 | 2#12, #12GR, 3/4" | C | 2#12, #12GR, 3/4" | 20/1 | | SPARE | 90 |
| 91 | TOWN HALL FLOOR RECEPT | 0.7 | 20/1 | 2#12, #12GR, 3/4" | A | - | 20/1 | - | SPARE | 92 |
| 93 | TOWN HALL RECEPTACLES | 0.9 | 20/1 | 2#12, #12GR, 3/4" | B | 2#12, #12GR, 3/4" | 20/1 | 1.1 | TOWN HALL RECEPTACLES | 94 |
| 95 | RECEPTACLES | 1.4 | 20/1 | 2#12, #12GR, 3/4" | C | - | 20/1 | - | SPARE | 96 |
| 97 | REC-TV ASSEMBLY | 1.0 | 20/1 | 2#12, #12GR, 3/4" | A | 2#12, #12GR, 3/4" | 20/1 | 1.5 | S. K. DISHWASHER | 98 |
| 99 | BREAK RM DISHWASHER | 1.5 | 20/1 | 2#12, #12GR, 3/4" | B | 2#12, #12GR, 3/4" | 20/1 | 1.1 | WP GFI RECEPTACLES | 100 |
| 101 | WP GFI RECEPTACLES | 1.1 | 20/1 | 2#12, #12GR, 3/4" | C | 2#12, #12GR, 3/4" | 20/2 | 0.5 | BC-1, BC-2, BC-3 | 102 |
| 103 | EBB-1 | 1.0 | 20/2 | 2#12, #12GR, 3/4" | A | - | - | - | - | 104 |
| 105 | - | - | - | - | B | 3#4, #10GR, 1-1/4" | 60/3 | 13.7 | CU-5 | 106 |
| 107 | AHU-16 | 1.6 | 15/2 | 2#12, #12GR, 3/4" | C | - | - | - | - | 108 |
| 109 | - | - | - | - | A | - | - | - | - | 110 |
| 111 | CU-2 | 15.9 | 70/3 | 3#4, #8GR, 1-1/4" | B | 3#4, #10GR, 1-1/4" | 60/3 | 13.7 | CU-6 | 112 |
| 113 | - | - | - | - | C | - | - | - | - | 114 |
| 115 | - | - | - | - | A | - | - | - | - | 116 |
| 117 | CU-4 | 15.9 | 70/3 | 3#4, #8GR, 1-1/4" | B | 2#12, #12GR, 3/4" | 20/2 | 2.0 | EUH-1 | 118 |
| 119 | - | - | - | - | C | - | - | - | - | 120 |
| 121 | - | - | - | - | A | 2#12, #12GR, 3/4" | 20/1 | 0.5 | FACP | 122 |
| 123 | EF-1, EF-2, EF-3 | 1.2 | 15/2 | 2#12, #12GR, 3/4" | B | 2#12, #12GR, 3/4" | 20/1 | 0.5 | SECURITY PANEL | 124 |
| 125 | - | - | - | - | C | 2#12, #12GR, 3/4" | 20/1 | 0.02 | EF-4 | 126 |

SUBTOTAL (KVA): 128.1  SUBTOTAL (KVA): 87.3

TOTAL (KVA): 215.4

197.3 WITH RECEPTACLE DEMAND

| | KVA |
|---|---|
| RECEPTACLE LOAD | 46.3 |
| 100% DEMAND | 10.0 |
| RECEPTACLE DEMAND | 28.1 |

548.0 AMPS @ 208 V

685.0 AMPS @ 125%

*** GFCI NEXT TO BREAKER RATING INDICATES A 5mA GFCI BREAKER TO BE PROVIDED
**PROVIDE THREE 42 POLE PANELS WITH FEED-THROUGH LUGS FOR 1ST&2ND SECTIONS
**PROVIDE LOCK ON DEVICE FOR FACP & SECURITY PANEL CIRCUITS.

BYRAM MUNCIPAL BUILDING
ADMINISTRATIVE / CIVIL
10 MANSFIELD DRIVE
LOTS 16.01 - BLOCK 365
BYRAM TOWNSHIP
SUSSEX COUNTY, NEW JERSEY


THE NADER GROUP, LLC
Architects, Engineers, & Surveyors
111 Mill Street
Hackettstown, NJ 07840
p.908.850.3500 | f.908.441.5803
e. wassim.nader@thenadergroup.com
www.naderhouseofdesign.com

BRIAN D. TANNENHAUS


ISSUED FOR BID
NOT FOR CONSTRUCTION
08/01/2023

NJ PROFESSIONAL ENGINEER
NO. GE 45801

DATE: XX/XX/XXXX


BDi engineering
NJ CERTIFICATE OF AUTHORIZATION – 24GA28116100
BD Engineering, LLC
44 Main Street, Farmingdale, NJ 07727
732-886-5432
www.bd-engineering.com Project No. 210133


| No. | DATE | REVISION |
|---|---|---|
| 00 | 08/01/23 | BID SET |

DRW BY: AW
SCALE: AS NOTED
DATE: JUNE 16, 2023
JOB No. 18.TNG029
DRAWING Name: ADMIN & CIVIL-ELECTRICAL DETAILS AND SCHEDULE
DRAWING No. E-204

8/4/2023 2:44 PM

**RISER NOTES:**

1. RATING OF CIRCUIT BREAKERS SHALL BE COORDINATED WITH UTILITY.
2. GROUNDING ELECTRODES AND GROUNDING ELECTRODE CONDUCTORS AS FOLLOWS
   -1#1/0 TO GROUNDING SYSTEM AS SHOWN IN SL DIAGRAM.

**ELECTRICAL NOTES:**

1. DRAWINGS ARE DIAGRAMMATIC AND DO NOT SHOW ALL OFFSETS OR BOXES NOR ACTUAL CONDUIT ROUTING.
2. ALL OUTLET LOCATIONS SHALL BE VERIFIED WITH OWNER BEFORE ROUGH-IN.
3. ALL ELECTRICAL EQUIPMENT SHALL BE U.L. APPROVED AND SHALL BE COMMERCIAL GRADE.
4. MECHANICAL CONTRACTOR AND ELECTRICAL CONTRACTOR SHALL COORDINATE THEIR WORK AND VERIFY AVAILABLE VOLTAGE BEFORE ORDERING EQUIPMENT. MECHANICAL CONTRACTOR SHALL SUPPLY ELECTRICAL CONTRACTOR WITH WIRING AND PROTECTIVE DEVICE INFORMATION AS SOON AS POSSIBLE AFTER SUBMISSION OF SHOP DRAWINGS. ELECTRICAL CONTRACTOR SHALL VERIFY PROPER WIRING SIZE, CIRCUIT PROTECTION TYPE, AND CIRCUIT AMPACITY PRIOR TO RUNNING CIRCUITS OR PULLING WIRE.
5. ALL EMERGENCY AND EXIT LIGHTS SHALL BE CONNECTED TO NON-SWITCHED SIDE OF THE ASSOCIATED CIRCUIT.
6. MOTOR HEATER ELEMENTS SHALL BE PROVIDED BY EC AS PER MOTOR NAMEPLATE FLA & AS REQUIRED.
7. ELECTRICAL CONTRACTOR PROVIDE BLDG GROUND LOOP AS PER NEC AND LOCAL BLDG CODE.
8. ELECTRICAL CONTRACTOR TO PROVIDE EQUIPMENT GROUND AS PER NEC AND LOCAL BLDG CODE.
9. ALL CIRCUITS SHALL CONTAIN AN INSULATED COPPER GROUND CONDUCTOR GROUND PER NEC.
10. CONNECT RECESSED LIGHTING FIXTURES TO JUNCTION BOX IN SPACE ABOVE SUSPENDED CEILING USING GREENFIELD FLEXIBLE CONDUIT. 6' LENGTH MAXIMUM. THE MAXIMUM NUMBER OF LIGHTING FIXTURES THAT MAY BE CONNECTED TO ONE BOX IS THREE.
11. WIRING WITHIN PARTITIONS AND IN SPACE ABOVE SUSPENDED CEILING MAY BE METAL CLAD (AC) UNLESS PROHIBITED BY LOCAL CODES. EXPOSED WIRING SHALL BE IN CONDUIT $\frac{3}{4}$" TRADE SIZE, MINIMUM.
12. ALL FLUORESCENT BALLASTS SHALL BE ELECTRONIC TYPE.

**WIRING TABLE NOTES:**

1. THE PURPOSE OF THESE TABLES IS TO INDICATE THE BRANCH CIRCUIT WIRING REQUIRED BASED ON THE RATING OF THE BRANCH CIRCUIT OVERCURRENT PROTECTION AND THE RUN LENGTH.
2. FOR FEEDER WIRING, SEE THE ONE-LINE DIAGRAM
3. THE TABLE SHOW THE REQUIRED BRANCH CIRCUIT WIRING, ADJUST TO COMPENSATE FOR VOLTAGE DROP, ADDITIONALLY, IF THE NUMBER OF CURRENT-CARRYING CONDUCTORS IN A CONDUIT EXCEEDS THREE REDUCE THE ALLOWABLE AMPACITY OF EACH CONDUCTOR IN ACCORDANCE WITH THE 'WIRE' FILL.
4. USE THESE TABLES FOR BRANCH CIRCUIT WIRING RUN IN CONDUIT OR WIREWAY. FOR WIRING IN WIREWAY, NO DERATING FOR WIRE FILL IS REQUIRED IF THE WIRE FILL DOES NOT EXCEED 20% OF THE CROSS SECTIONAL AREA AND THE NUMBER OF WIRES DOES NOT EXCEED 30,
5. AS REQUIRED BY NEC.

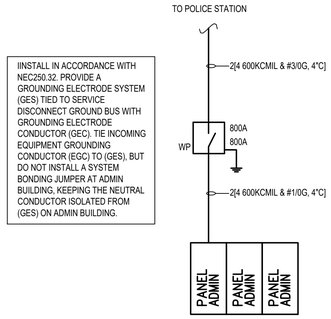


SINGLE LINE RISER DIAGRAM
SCALE: NONE

## SLD GENERAL NOTES:

1. 1. UNLESS OTHERWISE NOTED, ALL CIRCUIT BREAKERS AND/OR FUSED/SWITCHES SHOWN ARE 3 POLE TYPE.
2. CURRENT (AFC) SHOWN IS THE MINIMUM RATING FOR THAT EQUIPMENT. THE CONTRACTOR SHALL ENSURE THE FAULT CURRENT RATING OF THE EQUIPMENT PROVIDED IS EQUAL OR GREATER THAN THE AVAILABLE FAULT CURRENT (AFC).
3. THE CONTRACTOR SHALL ASSUME FOR MULTI-SECTION PANELS THERE WILL BE FEED-THROUGH LUGS FROM ONE SECTION TO THE OTHER SECTION AND CONNECTED WITH A FEEDER THE SAME SIZE AS THE FEEDER CONDUCTORS AND CONDUIT(S) FROM THE UPSTREAM OVER CURRENT PROTECTION DEVICE.
4. UNLESS OTHERWISE NOTED, ALL CONDUCTOR SIZES SHOWN ARE COPPER TYPE.
5. UNLESS OTHERWISE NOTED ALL ELECTRICAL PANELS WILL BE REQUIRED TO HAVE SURGE PROTECTION.
6. THE GENERATOR REFERENCED IN THIS SINGLE LINE DIAGRAM IS TO BE INSTALLED AS PART OF THE CONSTRUCTION OF THE NEW ADMINISTRATIVE AND POLICE BUILDINGS. THE PROPOSED GENERATOR SHALL HAVE ADEQUATE CAPACITY TO HANDLE ALL CONNECTED LOADS IN BOTH BUILDINGS. SEE SITE PLAN DRAWINGS FOR PROPOSED GENERATOR LOCATION AND SERVICE LOCATION.
7. CONDUIT FOR GENSET TELECOMMUNICATION SHALL BE PROVIDED IN SEPARATE CONDUIT IN ADDITION TO REQUIRED SERVICE CONDUCTORS. SERVICE CONDUCTORS AND GENSET TELCO SHALL BE PROVIDED TO BOTH PROPOSED BUILDINGS. REQUIREMENTS FOR GENSET TELECOMMUNICATIONS SHALL BE AS REQUIRED PER GENSET MANUFACTURER.

FOR THE AVAILABLE FAULT CURRENT CALCULATIONS WE HAVE ASSUMED A 250 kVA UTILITY TRANSFORMER WITH INFINITE AVAILABLE FAULT CURRENT (AFC)

Z = 3%
AFC = 23,500 A

THE CONTRACTOR SHALL COORDINATE THE FINAL AVAILABLE FAULT CURRENT WITH THE UTILITY COMPANY PRIOR TO ORDERING EQUIPMENT. ONCE THE AVAILABLE FAULT CURRENT IS KNOWN THE CONTRACTOR SHALL CONTACT THE ENGINEER. THE ENGINEER WILL PROVIDE THE CALCULATED AVAILABLE FAULT CURRENT FOR ALL OF THE ELECTRICAL EQUIPMENT AND INFORM THE ELECTRICIAN THE AVAILABLE FAULT CURRENT AND THE DATE THE FAULT CURRENT WAS CALCULATED. THIS INFORMATION WILL BE PLACED ON A WATERPROOF PERMANENT ENGRAVED PLACARD THAT WILL BE PLACED ON THE SERVICE EQUIPMENT.

SEE POLICE STATION PLANS FOR SLD AND ADDITIONAL INFORMATION.

## GENERAL FIRE ALARM SYSTEM NOTES

1. FIRE ALARM SYSTEM EQUIPMENT & INSTALLATION SHALL BE IN ACCORDANCE WITH THE APPLICABLE STATE BUILDING AND FIRE CODE. REFER TO THE ARCHITECTS DRAWINGS FOR THE BUILDING CLASSIFICATIONS.
2. FIRE ALARM SYSTEM SHALL BE INSTALLED BY A NICET CERTIFIED FIRE ALARM INSTALLER. FIRE ALARM SYSTEM SHALL BE U.L., N.F.P.A., F.M. AND LOCALLY APPROVED. THE SYSTEM SHALL COMPLY WITH THE ABOVE MENTIONED BUILDING CODE, AMERICAN DISABILITY ACT (ADA) AND ALL OTHER APPLICABLE STATE AND LOCAL CODES & REGULATIONS.
3. THE FIRE ALARM CONTRACTOR SHALL COORDINATE WITH THE FIRE ALARM EQUIPMENT MANUFACTURER FOR THE EXACT NUMBER AND SIZE OF ALL SYSTEM WIRING. ALL FIRE ALARM SYSTEM WIRING SHALL BE INSTALLED IN CONDUIT, SIZED IN ACCORDANCE WITH THE NATIONAL ELECTRICAL CODE.
4. THE FIRE ALARM RISER DIAGRAM IS DIAGRAMMATIC AND SERVES TO INDICATE THE ALARM DEVICE INTERCONNECTIONS AS CLEARLY AS POSSIBLE. IT DOES NOT SHOW QUANTITY OF DEVICES, ROUTING OR OFFSETS OF INTERCONNECTIONS OR QUANTITY. THE CONTRACTOR SHALL DETERMINE DEVICE LOCATIONS FROM THE DRAWING AND SELECT OPTIMUM ROUTING. PROVIDE OFFSETS AS MAY BE REQUIRED.
5. ALL JUNCTION BOXES ASSOCIATED WITH THE FIRE ALARM SYSTEM SHALL BE PAINTED RED.
6. DEVICE MOUNTING HEIGHT SHALL COMPLY WITH ALL ANSI A117 AND NFPA REQUIREMENTS.
7. THE FIRE ALARM PANEL SHALL NOTIFY THE LOCAL FIRE STATION HAVING JURISDICTION AND/OR CENTRAL MONITORING STATION. THE INSTALLATION CONTRACTOR SHALL COORDINATE WITH THE LOCAL INSPECTOR FOR AN AUTO DIALER APPROVED LOCAL STATION.
8. THE FIRE ALARM INSTALLER SHALL GUARANTEE ALL WORK, MATERIAL, AND EQUIPMENT FOR A PERIOD OF ONE (1) YEAR FROM DATE OF EQUIPMENT TURN OVER TO THE OWNER.
9. THE FIRE ALARM INSTALLER SHALL FURNISH AND INSTALL A COMPLETE FIRE ALARM SYSTEM INCLUDING ALL PANELS, WIRING, ASSOCIATED BOXES, CONDUITS, FITTINGS, CONNECTORS AND ALL NECESSARY APPLIANCES FOR AN APPROVED FIRE ALARM INSTALLATION.
10. ALL CONDUCTORS SHALL BE MINIMUM #14 THWN SOLID COPPER 90 DEGREES C. FPLP CABLE SHALL HAVE A MINIMUM RATING OF 150°C.
11. ALL 120V SUPPLY POWER CONDUCTORS TO THE FIRE COMMAND STATION AND/OR FIRE ALARM CONTROL UNIT AND/OR TO OUTLYING CONTROL CABINETS, SHALL CONTAIN A GREEN INSULATED GROUNDING CONDUCTOR SIZED IN ACCORDANCE WITH THE ADOPTED ELECTRICAL CODE WITH A MINIMUM OF #10 AWG.
12. THE FIRE ALARM INSTALLER SHALL SUBMIT IBC SECTION 907 SIGNED AND SEALED SHOP DRAWINGS TO THE AUTHORITY HAVING JURISDICTION THAT INCLUDE BUT ARE NOT LIMITED TO ALL BATTERY CALCULATIONS, EQUIPMENT SPECIFICATIONS, NUMBER OF DEVICES, VOLTAGE DROP CALCULATIONS AND ROUTING OF CABLES. THE FIRE ALARM INSTALLER SHALL BE STATE APPROVED AND SHALL ATTEND ALL INSPECTIONS. THE PLANS ARE TO BE SIGNED AND SEALED BY A PROFESSIONAL ENGINEER LICENSED TO PRACTICE IN THE STATE THIS PROJECT IS LOCATED OR IF ACCEPTABLE BY THE AUTHORITY HAVING JURISDICTION BE A MINIMUM NICET LEVEL III CERTIFIED DESIGNER.
13. ALL STROBES SHALL BE SYNCHRONIZED TYPE.
14. SMOKE DETECTORS SHALL BE A MINIMUM OF 3(THREE) FEET FROM ANY AIR SUPPLY OR AIR RETURN DIFFUSERS FOR ANY HVAC AND EXHAUST SYSTEMS.
15. THE CONTRACTOR SHALL BE MADE AWARE THAT THE ANNUNCIATION DEVICES ARE SHOWN WIRED DIAGRAMMATICALLY. THE CONTRACTOR SHALL PROVIDE ALL NECESSARY POWER SUPPLIES AS NECESSARY FOR A COMPLETE AND OPERATIONAL SYSTEM. PROVIDE A SMOKE DETECTOR ABOVE THE POWER SUPPLY(S). IF THE POWER SUPPLIES ARE TO BE REMOTE FROM THE MAIN FIRE ALARM PANEL THE CONTRACTOR SHALL INFORM THE ELECTRICIAN OF THESE ADDITIONAL CIRCUIT REQUIREMENTS, FAILURE TO INFORM THE ELECTRICIAN OF THESE REQUIREMENTS WILL RESULT IN THE DENIAL OF ANY EXTRA'S.
16. FOR THE SYSTEM CONTROL PANELS AND/OR POWER SUPPLIES THE CONTRACTOR SHALL INSTALL THE CONDUITS FROM THE SIDE OR BOTTOM PORTION OF THE PANEL ONLY. THE CONTRACTOR SHALL ENSURE THAT NO CONDUITS ARE INSTALLED IN THE TOP OF THE(SE) PANEL(S).
17. PROVIDE SURGE SUPPRESSION DEVICES ON ALL INCOMING TELECOMMUNICATION LINES AND POWER LINES FOR MAIN PANEL AND AUXILIARY PANELS.

## FIRE ALARM SEQUENCE OF OPERATIONS

| ACTIVATION (ALARM) OF NON-WATER-BASED AUTOMATIC FIRE SUPPRESSION SYSTEM | ACTIVATION OF MANUAL PULL STATION | ACTIVATION OF AREA SMOKE DETECTOR | ACTIVATION OF DUCT SMOKE DETECTOR | | TROUBLE CONDITION AT FACP & EACH MONITORED WATERLESS SYSTEM PANEL | SUPERVISORY CONDITION AT FACP & EACH MONITORED WATERLESS SYSTEM PANEL | |
|---|---|---|---|---|---|---|---|
| X | X | X | X | | X | X | ACTIVATES ZONE ANNUNCIATION ON PANEL AND L.C.D. |
| X | X | X | X | | | | ACTIVATES AUDIO DEVICES |
| X | X | X | X | | | | ACTIVATES STROBE LIGHTS THROUGHOUT |
| X | X | X | X | | X | X | TRANSMITS SIGNAL TO CENTRAL OFFICE COMPANY |
| X | X | X | X | | | | ACTIVATES RELAY TO SHUT OFF AC UNITS, AHU'S, AND FANS. COORDINATE WITH THE LOCAL FIRE MARSHALL IF ALL AC UNITS, AHU'S AND FANS NEED TO SHUT DOWN IF ONE DUCT DETECTOR IS ACTIVATED. SYSTEM SHALL BE CAPABLE OF THIS FEATURE. FOR CARBON MONOXIDE IT IS TO SHUT DOWN ALL FUEL BURNING APPLIANCES SUCH AS BOILERS. |
| X | X | X | X | | X | X | ACTIVATES SPECIFIC SIGNAL AT REMOTE ANNUCIATOR |
| | | | | | | | |
| | X | X | X | | | | RELEASE ALL SECURITY DOORS, COORDINATE WITH TOWN PERSONNEL. |
| | | | | | | | |

NOTES:

1. FIRE DEPARTMENT AND CENTRAL OFFICE COMPANY TO RECEIVE SEPARATE & DISTINCT SIGNALS.
   a) MANUAL ALARM
   b) AUTOMATIC ALARM (ie., SMOKE & DUCT DETECTORS.)
   c) TROUBLE & SUPERVISORY SIGNAL
2. ALL FANS TO BE MANUALLY RESTARTED. AUTOMATIC RESTART IS NOT PERMITTED
3. ALL SIGNALS TO FIRE ALARM PANEL TO BE DUPLICATED AT REMOTE ANNUNCIATOR PANEL LOCATED BY ENTRANCE. FINAL LOCATION TO BE DETERMINED BY THE FIRE MARSHAL.

* SEQUENCE OF OPERATION MUST COMPLY WITH AHJ AND LOCAL FIRE DEPARTMENT.

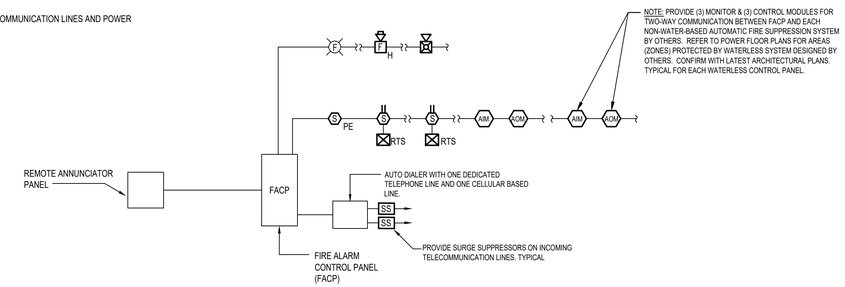


FIRE ALARM RISER AND NOTES
SCALE: NONE

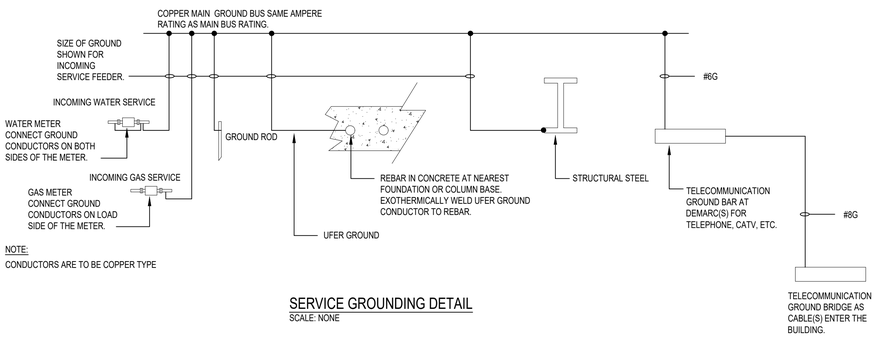


NOTE:
CONDUCTORS ARE TO BE COPPER TYPE

SERVICE GROUNDING DETAIL
SCALE: NONE

## FIRE ALARM SUMMARY:

THE FIRE ALARM FOR THE BUILDING SHALL BE A LISTED ADDRESSABLE HORN/STROBE TYPE TO PROVIDE THE REQUIRED AUDIO AND VISUAL NOTIFICATION TO EVACUATE THE ENTIRE BUILDING UPON A FIRE CALL, THERE WILL BE NO OCCUPANT RELOCATION DURING A FIRE CALL.

ALARM INITIATION:

MANUAL INITIATION: PULLSTATIONS SHALL BE PROVIDED AT ALL EXITS.

DUCT SMOKE DETECTION: DUCT SMOKE DETECTION SHALL BE LOCATED ON THE SUPPLY AND RETURN OF THE BUILDINGS MAIN HVAC ROOFTOP UNITS. DUCT SMOKE DETECTION SHALL BE ADDED AT EACH FLOOR TAKEOFF FROM THE SUPPLY AND RETURN MAINS.

SMOKE DETECTORS: AREA SMOKE DETECTORS SHALL BE PROVIDED ABOVE EACH FIRE ALARM PANEL AND/OR POWER SUPPLY AND ALL PROPOSED ROOMS.

DOOR RELEASE: SMOKE DOOR HOLD OPENS, SECURITY DOORS . DUE TO SECURITY SECURITY ISSUES DOORS MAY NOT BE RELEASED. THIS IS TO BE COORDINATED IN THE FIELD DURING PROGRAMMING WITH THE TOWN PERSONNEL AND CODE OFFICIALS.

OCCUPANT NOTIFICATION:

VISUAL: PUBLIC MODE STROBES WILL BE PROVIDED THROUGHOUT THE FACILITY EXCEPT FOR THE STAIRWELLS.

AUDIO: SPACING SHALL BE AS SUCH TO PROVIDE THE CODE REQUIRED AUDIBILITY 15DBA ABOVE THE AVERAGE AMBIENT SOUND LEVEL OR 5DBA ABOVE THE MAXIMUM SOUND LEVEL HAVING A DURATION OF NOT LESS THAN 60 SECONDS. PER ANNEX A OF NFPA 72 THE ASSUMED AVERAGE AMBIENT SOUND LEVELS SHALL BE THE FOLLOWING:

OFFICE AREA'S : 55DBA

MECHANICAL ROOMS: 85DBA

ASSEMBLY TYPE OCCUPANCIES: 55DBA

CAFETERIA: 55DBA

STORAGE AREAS: 30DBA

INDUSTRIAL EQUIPMENT AREAS(F OCCUPANCY): 80DBA

SUPERVISORY:

POWER SUPPLIES: THE POWER SUPPLIES SHALL BE SUPERVISED TO VERIFY POWER IS STILL AVAILABLE.

OFF NORMAL: ALL DEVICE OFF NORMAL SIGNALS WILL BE MONITORED SUCH AS OTHER FIRE ALARM COMPONENTS, OR GENERATOR.

TROUBLE:

GENERATOR: ANY TROUBLE SIGNALS FROM THE GENERATOR OR LIFE SAFETY ATS(S) WILL BE MONITORED.

FIRE ALARM ITEMS ARE BROKEN: FIRE ALARM DEVICES THAT ARE NOT OPERATIONAL WILL BE MONITORED FOR TROUBLE SIGNALS.

POWER SUPPLIES:

POWER SHALL BE BACKED UP BY THE EMERGENCY GENERATOR ALONG WITH HAVING INTERNAL BATTERIES TO PROVIDE A MINIMUM OF 24 HOURS OF STANDBY POWER AND AFTER THAT 24 HOUR PERIOD A MINIMUM OF 5 MINUTES OF ALARM AT MAXIMUM LOAD.

CIRCUIT AND PATHWAY:

PATHWAY CLASS DESIGNATION: NFPA 72 APPLICABLE CLASS B PATHWAY'S SHALL BE PROVIDED FOR FOR BOTH NOTIFICATION CIRCUITS AND INITIATION CIRCUITS.

CENTRAL MONITORING:

COMMUNICATION WITH A CENTRAL MONITORING STATION WILL SHALL BE PROVIDED. TWO LINES WILL BE UTILIZED. ONE WILL BE CELLULAR BASED SYSTEM AND THE OTHER WILL UTILIZE A LANDLINE, COPPER PAIR POTS LINE IF AVAILABLE.

ZONING:

ZONING SHALL BE PER SMOKE OR FIRE PARTITION; NO MORE THAN 22,500 SQUARE FEET.

BYRAM MUNCIPAL BUILDING
ADMINISTRATIVE / CIVIL
10 MANSFIELD DRIVE.
LOTS 16.01 - BLOCK 365
BYRAM TOWNSHIP
SUSSEX COUNTY, NEW JERSEY


THE NADER GROUP, LLC
Architects, Engineers, & Surveyors
111 Mill Street
Hackettstown, NJ 07840
p.908.850.3500 | f.908.441.5803
e. wassim.nader@thenadergroup.com
www.naderhouseofdesign.com

BRIAN D. TANNENHAUS


ISSUED FOR BID
NOT FOR CONSTRUCTION
08/01/2023

NJ PROFESSIONAL ENGINEER
NO. GE 45801

DATE: XX/XX/XXXX


BD engineering
NJ CERTIFICATE OF AUTHORIZATION – 24GA28116100
BD Engineering, LLC 732-886-5432
44 Main Street, Farmingdale, NJ 07727
www.bd-engineering.com Project No. 210133


| No. | DATE | REVISION |
|---|---|---|
| 00 | | |
| | 08/01/23 | BID SET |

DRW BY: AW
SCALE: AS NOTED
DATE: JUNE 16, 2023
JOB No. 18.TNG029
DRAWING Name
ADMIN & CIVIL-ELECTRICAL SINGLE LINE DIAGRAM & NOTES

DRAWING No.
E-205

8/4/2023 2:44 PM

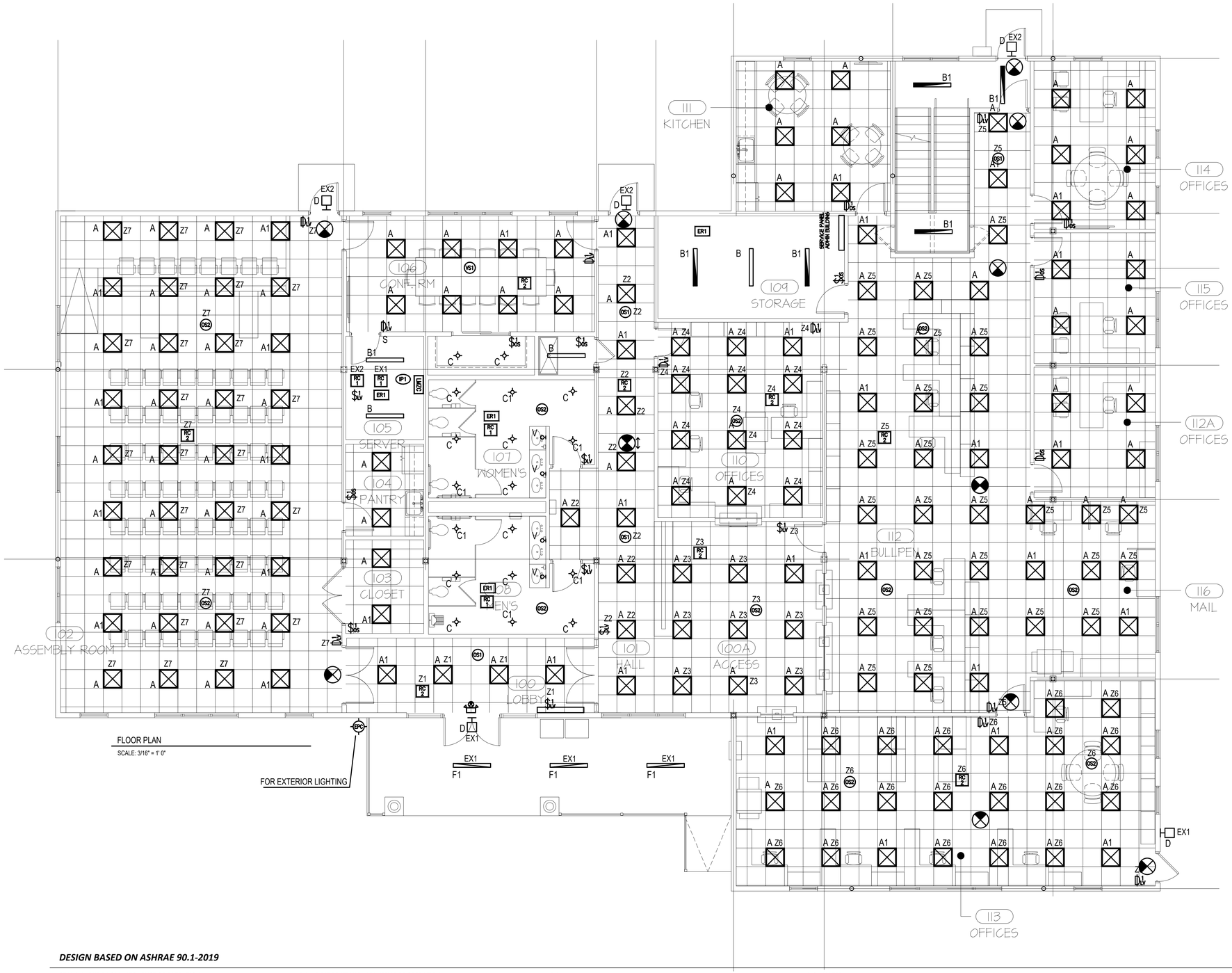


FLOOR PLAN

SCALE: 3/16" = 1' 0"

### LIGHTING CONTROL LEGEND
### LEGRAND WATTSTOPPER

| | | | |
|---|---|---|---|
| RC 1 | LMRC-101 | 120/277 VAC | 1-relay On/Off Room Controller |
| RC 2 | LMRC-211 | 120/277 VAC | 1-Relay On/Off 0-10V Dimming Room Controller |
| ER1 | ELCU-200 | 120/277 VAC | Emergency Shunt Relay |
| OS1 | LMUC-100-2 | 24VDC, 20mA | Ultrasonic Ceiling Sensor |
| OS2 | LMDC-100 | 24VDC, 20mA | Dual Technology Ceiling Sensor |
| VS1 | LMDC-100 | 24VDC, 20mA | Dual Technology Ceiling Sensor |
| $1ds | PW-301 | 120/277 VAC | 1-Button PIR On/Off Switch Occ Sensor |
| D1ds | DW-311 | 120/277 VAC | 2-Button Dual Tech 0-10V Dim With Switch Occ Sensor |
| $1v | LMSW-101 | 24VDC, 5mA | 1-button Digital Wall Switch |
| D1v | LMDM-101 | 24VDC, 5mA | 1-button Dimming Wall Switch |
| IP1 | LMIN-104 | 24VDC, 20mA | Input Module |
| EPC | LMPO-200 | 24VDC | Analog Exterior Photocells |
| LMZC | LMZC-301 | 120/277 VAC | Zone Controller With Enclosure |
| | | | |
| | | | |

### LIGHTING CONTROL NOTES

1. All sensor locations are approximate. Refer to the Manufacture's installation instructions prior to installation.

2. If any questions arise regarding sensor placement, contact SLS Lighting and Controls prior to installation to schedule a field visit.

3. If pendant mounted fixtures are present, location and coverage of sensors should be reviewed.

4. All corner mount sensors located in rooms with recessed fixtures should be mounted on ceiling instead of the wall. Please review installation diagram for instructions.

5. Ceiling mounted sensors require to be located no closer than 6-8' from air supply/return registers.

6. Maximum number of sensors that can be wired in parallel to a single room controller or power pack, depends on sensor model (see individual sheets for mA consumption).

7. Contractor is responsible for field verification of required number of power packs (if apply).

8. One power pack is required for each circuit that is to be controlled.

9. Power packs and/or DLM Room Controllers are shown for zoning purposes only. Contractor is responsible for determining actual location and circuiting.

10. Power packs (if apply) should be mounted at least 6-12 inches from any sensor.

11. Locations of photocells (if shown) are diagrammatic and for quantitative purposes only. Actual mounting locations of photocells should be determined in an onsite pre-installation meeting prior to roughing in equipment.

12. Per the requirements of the electrical code, areas labeled as "mechanical" or "electrical" where work may occur are not to be controlled by automated lighting controls alone.

13. Turn off any power at the circuit breaker before wiring any product.

14. Free-topology DLM local network segments may include digital load controllers, switches and sensors; Cat 5e cable, 150' per device to 1,000' max, per each local network.

**PLEASE CONTACT SLS CONTROLS WITH ANY QUESTIONS OR REVISIONS:**

**RON LEWERT - ron@slsltg.com**
**Cell Phone: 732-815-6931**

**DICKSON FERNANDES - dickson@slsltg.com**
**Cell Phone: 732-740-2294**

## *DESIGN BASED ON ASHRAE 90.1-2019*

### *STAND ALONE ROOM - SEQUENCE OF OPERATION*

**CLOSET/STORAGE/PANTRY.**
Auto-on/auto-off operation through wall switch/sensor.

**TYP. SMALL OFFICE/KITCHEN.**
Manual-on/auto-off operation through 0-10V dimming wall/sensor switch.

**CONFERENCE ROOM/ATTIC STORAGE.**
Manual-on/auto-off through local digital switches, room controller and ceiling sensors.

**MULTI-STALL RESTROOMS.**
Auto-on/auto-off operation through ceiling sensor, room controller. Digital switch for local control.

### *TIME SCHEDULE - SEQUENCE OF OPERATION*

**LOBBY/HALL /ACCESS.**
Auto time-on/auto time-off through time schedule via Zone Controller LMZC-301. During operating hours, room controller and ceiling sensors shall dim lighting fixtures by 50% after 20 min. of vacancy and be brought up to 100% output upon occupancy. Sensors and local digital switches also provide after hour override control.

**OFFICE-110&113/BULLPEN/MAIL/ASSEMBLY ROOM.**
Partial auto time-on (50% of the total lighting power)/Partial manual-on (via digital dimming switches)and full time-off through time schedule via LMZC zone controller. During operating hours, room controller and ceiling sensors shall dim lighting fixtures by 50% after 20 min. of vacancy and be brought up to 100% output upon occupancy. Sensors and local digital dimming switches also provide after hour override control.

**EXTERIOR LIGHTING (EX1 and EX2)**
All exterior building lighting shall be on/off dusk to dawn via the exterior photocell and Zone Controller LMZC-301.

*Provide one LMIN-104/LMPO-200 input module and exterior photocell.

### *NOTES*

**GENERAL NOTES**

All occupancy/vacancy sensors shall turn off respective lighting fixtures 20 min after vacancy.

Afterhour override control shall have a maximum override of no more than two hours per activation during scheduled off periods.

Confirm the exact dimming requirements of each purchased lighting fixture, prior to ordering the corresponding dimming room controller. Compatibility must be verified.

Lower case letter (example "a") located next to lighting fixture indicates the local switch zone.

All engraving of switches shall be coordinated with the owner prior to ordering.

**EMERGENCY NOTES**

All fixtures indicated with "EM" shall have an internal emergency battery or an remote inverter. An emergency bypass relay shall be provided to bypass local control, bringing fixture to full brightness during emergency operation.

All fixtures indicated with "NL" shall have an emergency branch circuit fed from a generator or an inverter and be unswitched night light.

# BYRAM MUNCIPAL BUILDING
## ADMINISTRATIVE / CIVIL
10 MANSFIELD DRIVE
LOTS 16.01 - BLOCK 365
BYRAM TOWNSHIP
SUSSEX COUNTY, NEW JERSEY

THE NADER GROUP, LLC
Architects, Engineers, & Surveyors
111 Mill Street
Hackettstown, NJ 07840
p.908.850.3500 | f.908.441.5803
e. wassim.nader@thenadergroup.com
www.naderhouseofdesign.com

BRIAN D. TANNENHAUS

ISSUED FOR BID
NOT FOR CONSTRUCTION
08/01/2023

NJ PROFESSIONAL ENGINEER
NO. GE 45801

DATE: XX/XX/XXXX

BD engineering
NJ CERTIFICATE OF AUTHORIZATION – 24GA28116100
BD Engineering, LLC 732-886-5432
44 Main Street, Farmingdale, NJ 07727
www.bd-engineering.com Project No. 210133

| No. | DATE | REVISION |
|---|---|---|
| 00 | | |
| | 08/01/23 | BID SET |

DRW BY: AW
SCALE: AS NOTED
DATE: JUNE 16, 2023
JOB No. 18.TNG029
DRAWING Name
ADMIN & CIVIL- LIGHTING CONTROLS AND LAYOUT
DRAWING No.
E-301

8/4/2023 2:44 PM

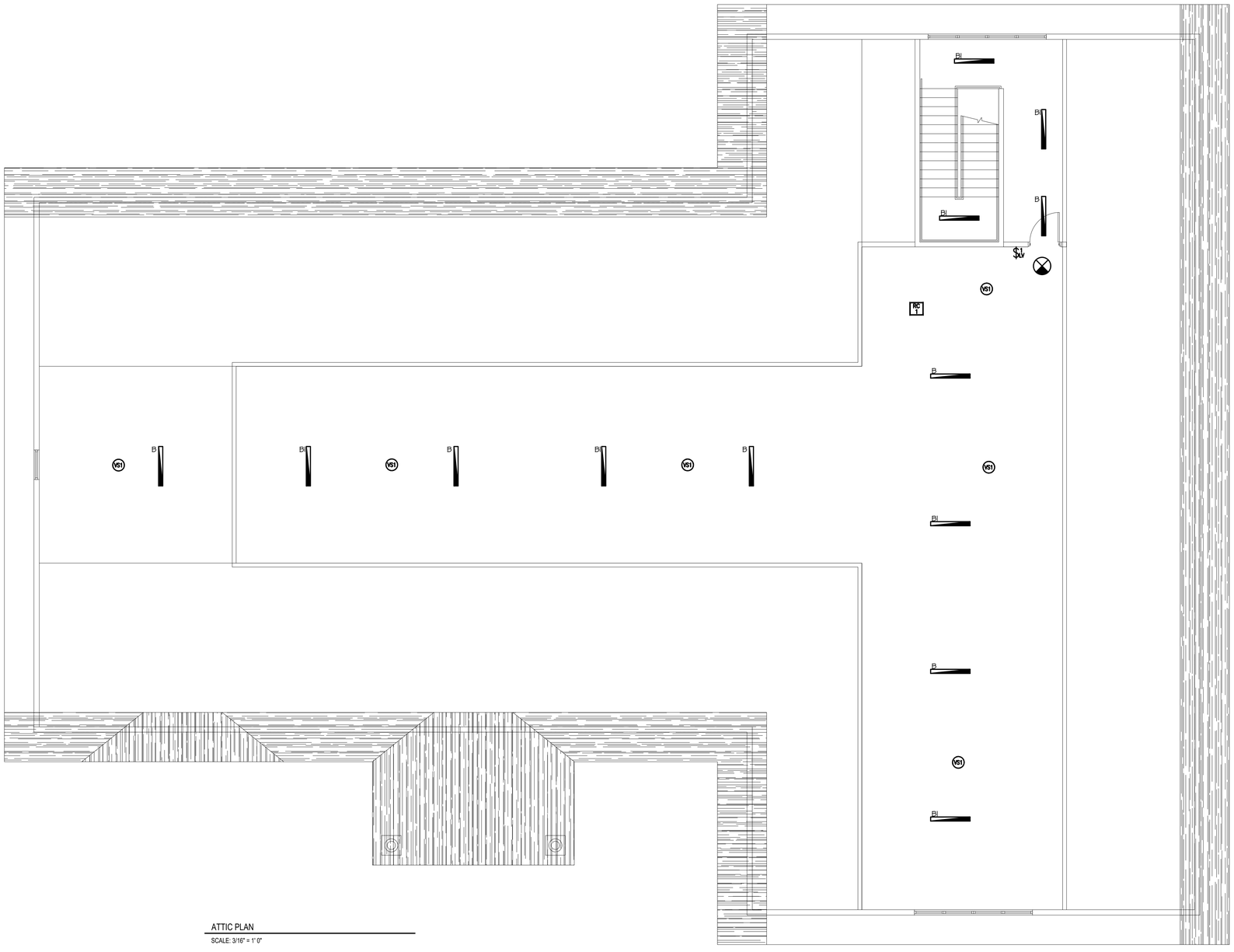


ATTIC PLAN

SCALE: 3/16" = 1'-0"

**PLEASE CONTACT SLS CONTROLS WITH ANY QUESTIONS OR REVISIONS:**

**RON LEWERT - ron@slsltg.com**
**Cell Phone: 732-815-6931**

**DICKSON FERNANDES - dickson@slsltg.com**
**Cell Phone: 732-740-2294**

***LIGHTING CONTROL LEGEND***
***LEGRAND WATTSTOPPER***

| | | | |
|---|---|---|---|
| RC 1 | LMRC-101 | 120/277 VAC | 1-relay On/Off Room Controller |
| RC 2 | LMRC-211 | 120/277 VAC | 1-Relay On/Off 0-10V Dimming Room Controller |
| ER1 | ELCU-200 | 120/277 VAC | Emergency Shunt Relay |
| VS1 | LMUC-100-2 | 24VDC, 20mA | Ultrasonic Ceiling Sensor |
| DS2 | LMDC-100 | 24VDC, 20mA | Dual Technology Ceiling Sensor |
| VS1 | LMDC-100 | 24VDC, 20mA | Dual Technology Ceiling Sensor |
| $1 Os | PW-301 | 120/277 VAC | 1-Button PIR On/Off Switch Occ Sensor |
| D1 Os | DW-311 | 120/277 VAC | 2-Button Dual Tech 0-10V Dim With Switch Occ Sensor |
| $1 W | LMSW-101 | 24VDC, 5mA | 1-button Digital Wall Switch |
| D1 W | LMDM-101 | 24VDC, 5mA | 1-button Dimming Wall Switch |
| IP1 | LMIN-104 | 24VDC, 20mA | Input Module |
| EPC | LMPO-200 | 24VDC | Analog Exterior Photocells |
| LMZC | LMZC-301 | 120/277 VAC | Zone Controller With Enclosure |
| | | | |
| | | | |

***LIGHTING CONTROL NOTES***

1. All sensor locations are approximate. Refer to the Manufacture's installation instructions prior to installation.

2. If any questions arise regarding sensor placement, contact SLS Lighting and Controls prior to installation to schedule a field visit.

3. If pendant mounted fixtures are present, location and coverage of sensors should be reviewed.

4. All corner mount sensors located in rooms with recessed fixtures should be mounted on ceiling instead of the wall. Please review installation diagram for instructions.

5. Ceiling mounted sensors require to be located no closer than 6-8' from air supply/return registers.

6. Maximum number of sensors that can be wired in parallel to a single room controller or power pack, depends on sensor model (see individual sheets for mA consumption).

7. Contractor is responsible for field verification of required number of power packs (if apply).

8. One power pack is required for each circuit that is to be controlled.

9. Power packs and/or DLM Room Controllers are shown for zoning purposes only. Contractor is responsible for determining actual location and circuiting.

10. Power packs (if apply) should be mounted at least 6-12 inches from any sensor.

11. Locations of photocells (if shown) are diagrammatic and for quantitative purposes only. Actual mounting locations of photocells should be determined in an onsite pre-installation meeting prior to roughing in equipment.

12. Per the requirements of the electrical code, areas labeled as "mechanical" or "electrical" where work may occur are not to be controlled by automated lighting controls alone.

13. Turn off any power at the circuit breaker before wiring any product.

14. Free-topology DLM local network segments may include digital load controllers, switches and sensors; Cat 5e cable, 150' per device to 1,000' max, per each local network.

# BYRAM MUNCIPAL BUILDING
## ADMINISTRATIVE / CIVIL
10 MANSFIELD DRIVE,
LOTS 16.01 - BLOCK 365
BYRAM TOWNSHIP
SUSSEX COUNTY, NEW JERSEY


THE NADER GROUP, LLC

Architects, Engineers, & Surveyors

111 Mill Street
Hackettstown, NJ 07840

p.908.850.3500 | f.908.441.5803
e. wassim.nader@thenadergroup.com

www.naderhouseofdesign.com

BRIAN D. TANNENHAUS


ISSUED FOR BID
NOT FOR CONSTRUCTION
08/01/2023

NJ PROFESSIONAL ENGINEER
NO. GE 45801

DATE: XX/XX/XXXX


BD engineering
NJ CERTIFICATE OF AUTHORIZATION - 24GA28116100
BD Engineering, LLC 732-886-5432
44 Main Street, Farmingdale, NJ 07727
www.bd-engineering.com Project No. 210133


| No. | DATE | REVISION |
|---|---|---|
| 00 | | |
| | 08/01/23 | BID SET |

DRW BY: AW
SCALE: AS NOTED
DATE: JUNE 16, 2023
JOB No. 18.TNG029
DRAWING Name

ADMIN & CIVIL-
LIGHTING CONTROLS
AND LAYOUT

DRAWING No.

E-302

8/4/2023 2:44 PM

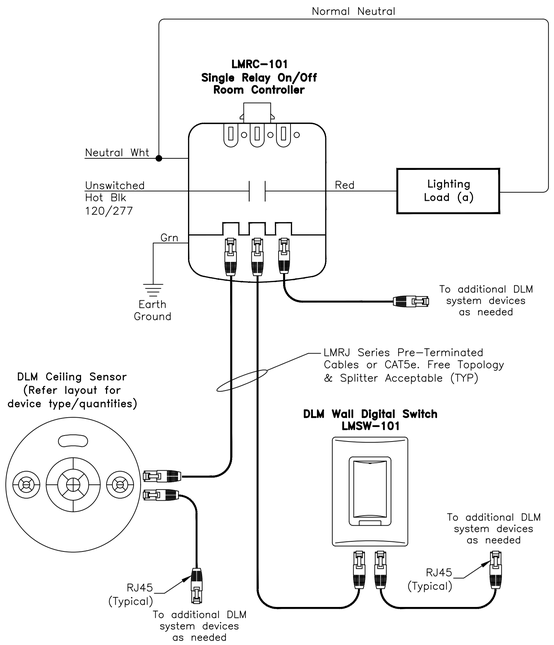


## TYP. LMRC-101 WIRING DIAGRAM

**NOTE: Refer controls layout for exact quantity and model number of devices.**

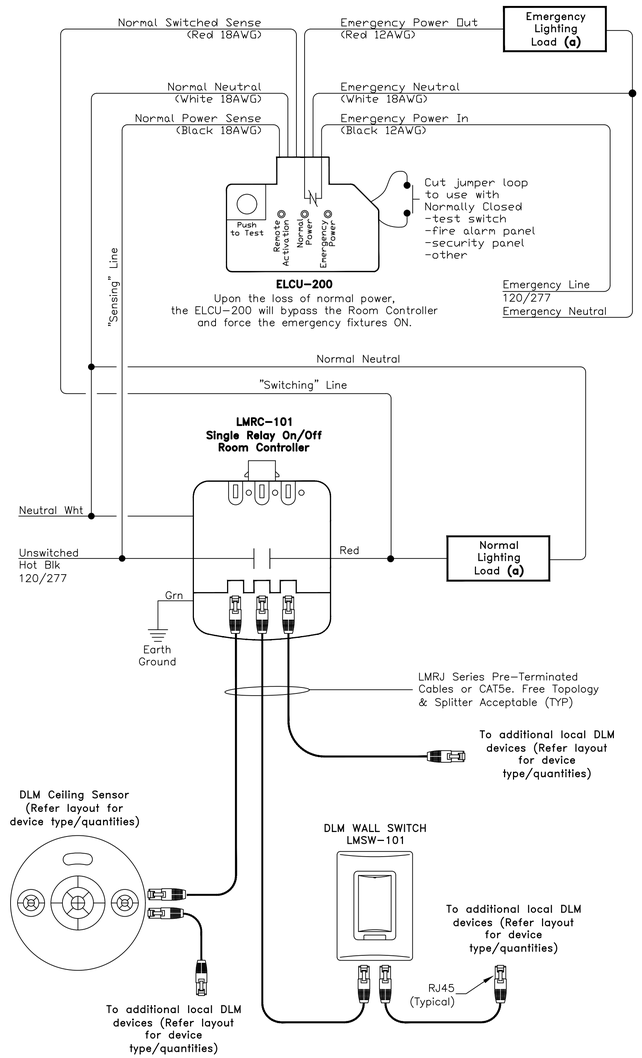


## TYP. LMRC-101 WITH ELCU-200 WIRING DIAGRAM

**NOTE: Refer to layout for exact quantity and model number of devices.**

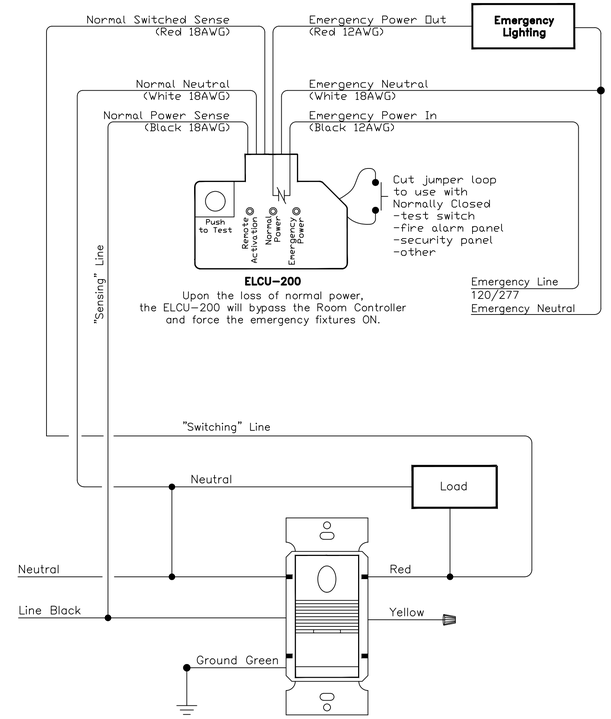


## PW-301 with ELCU-200 WIRING DIAGRAM

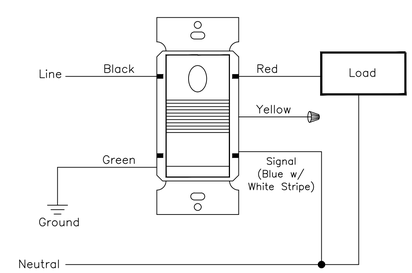


## PW-301 WIRING DIAGRAM

THESE DETAILS ARE PROVIDED FOR DIAGRAMMATIC PURPOSES ONLY. REFER TO THE MANUFACTURERS SHOP DRAWINGS, DETAILS AND INSTALLATION INSTRUCTIONS FOR FINAL REQUIREMENTS.

**PLEASE CONTACT SLS CONTROLS WITH ANY QUESTIONS OR REVISIONS:**

**RON LEWERT - ron@slsltg.com**
**Cell Phone: 732-815-6931**

**DICKSON FERNANDES - dickson@slsltg.com**
**Cell Phone: 732-740-2294**

### *LIGHTING CONTROL NOTES*

1. All sensor locations are approximate. Refer to the Manufacture's installation instructions prior to installation.

2. If any questions arise regarding sensor placement, contact SLS Lighting and Controls prior to installation to schedule a field visit.

3. If pendant mounted fixtures are present, location and coverage of sensors should be reviewed.

4. All corner mount sensors located in rooms with recessed fixtures should be mounted on ceiling instead of the wall. Please review installation diagram for instructions.

5. Ceiling mounted sensors require to be located no closer than 6-8' from air supply/return registers.

6. Maximum number of sensors that can be wired in parallel to a single room controller or power pack, depends on sensor model (see individual sheets for mA consumption).

7. Contractor is responsible for field verification of required number of power packs (if apply).

8. One power pack is required for each circuit that is to be controlled.

9. Power packs and/or DLM Room Controllers are shown for zoning purposes only. Contractor is responsible for determining actual location and circuiting.

10. Power packs (if apply) should be mounted at least 6-12 inches from any sensor.

11. Locations of photocells (if shown) are diagrammatic and for quantitative purposes only. Actual mounting locations of photocells should be determined in an onsite pre-installation meeting prior to roughing in equipment.

12. Per the requirements of the electrical code, areas labeled as "mechanical" or "electrical" where work may occur are not to be controlled by automated lighting controls alone.

13. Turn off any power at the circuit breaker before wiring any product.

14. Free-topology DLM local network segments may include digital load controllers, switches and sensors; Cat 5e cable, 150' per device to 1,000' max, per each local network.

### *LIGHTING CONTROL LEGEND*
### *LEGRAND WATTSTOPPER*

| | | | |
|---|---|---|---|
| RC 1 | LMRC-101 | 120/277 VAC | 1-relay On/Off Room Controller |
| RC 2 | LMRC-211 | 120/277 VAC | 1-Relay On/Off 0-10V Dimming Room Controller |
| ER1 | ELCU-200 | 120/277 VAC | Emergency Shunt Relay |
| OS1 | LMUC-100-2 | 24VDC, 20mA | Ultrasonic Ceiling Sensor |
| OS2 | LMDC-100 | 24VDC, 20mA | Dual Technology Ceiling Sensor |
| VS1 | LMDC-100 | 24VDC, 20mA | Dual Technology Ceiling Sensor |
| PW-301 | PW-301 | 120/277 VAC | 1-Button PIR On/Off Switch Occ Sensor |
| DW-311 | DW-311 | 120/277 VAC | 2-Button Dual Tech 0-10V Dim With Switch Occ Sensor |
| LMSW-101 | LMSW-101 | 24VDC, 5mA | 1-button Digital Wall Switch |
| LMDM-101 | LMDM-101 | 24VDC, 5mA | 1-button Dimming Wall Switch |
| IP1 | LMIN-104 | 24VDC, 20mA | Input Module |
| EPC | LMPO-200 | 24VDC | Analog Exterior Photocells |
| LMZC | LMZC-301 | 120/277 VAC | Zone Controller With Enclosure |

# BYRAM MUNCIPAL BUILDING
## ADMINISTRATIVE / CIVIL
10 MANSFIELD DRIVE
LOTS 16.01 - BLOCK 365
BYRAM TOWNSHIP
SUSSEX COUNTY, NEW JERSEY


THE NADER GROUP, LLC
Architects, Engineers, & Surveyors
111 Mill Street
Hackettstown, NJ 07840
p.908.850.3500 | f.908.441.5803
e. wassim.nader@thenadergroup.com
www.naderhouseofdesign.com

BRIAN D. TANNENHAUS


ISSUED FOR BID
NOT FOR CONSTRUCTION
08/01/2023

NJ PROFESSIONAL ENGINEER
NO. GE 45801
DATE: XX/XX/XXXX


BDi engineering
NJ CERTIFICATE OF AUTHORIZATION – 24GA28116100
BD Engineering, LLC 732-886-5432
44 Main Street, Farmingdale, NJ 07727
www.bd-engineering.com Project No. 210133


| No. | DATE | REVISION |
|---|---|---|
| 00 | 08/01/23 | BID SET |

DRW BY: AW
SCALE: AS NOTED
DATE: JUNE 16, 2023
JOB No. 18.TNG029
DRAWING Name
ADMIN & CIVIL-LIGHTING CONTROLS AND LAYOUT

DRAWING No.
E-303

8/4/2023 2:44 PM

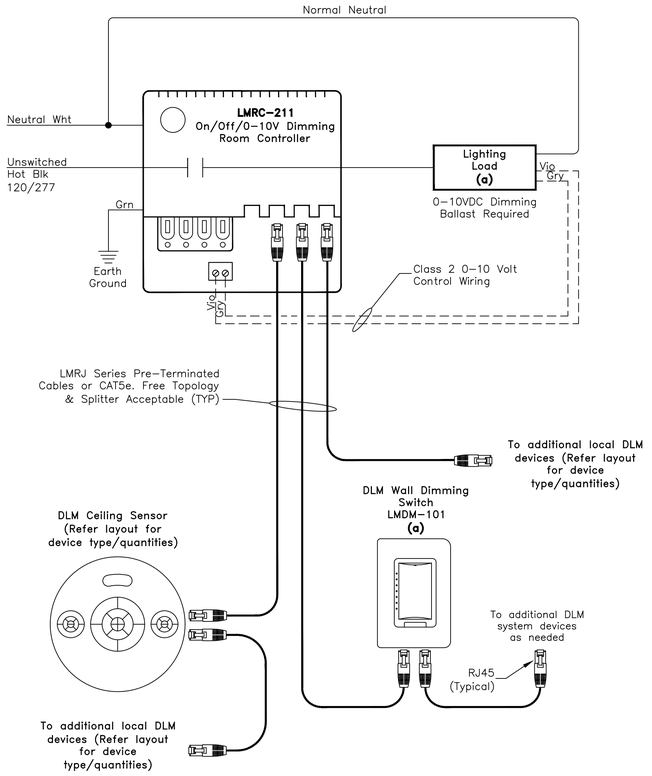


## TYP. LMRC-211
## WIRING DIAGRAM

**NOTE: Refer to layout for exact quantity and model number of devices.**

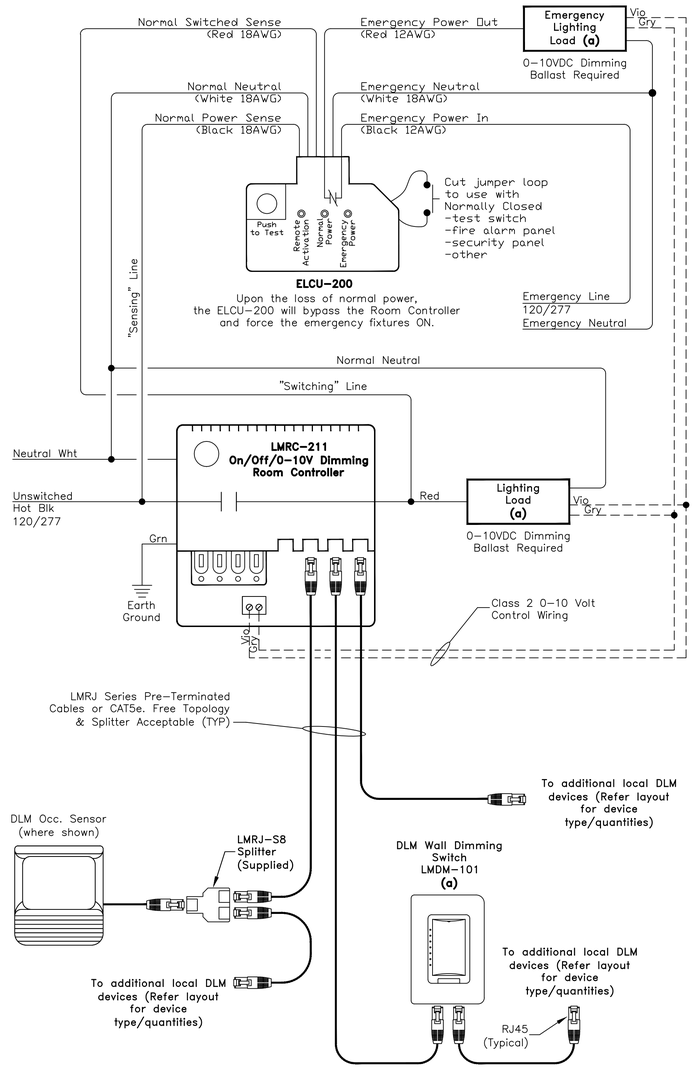


## TYP. LMRC-211 WITH ELCU-200
## WIRING DIAGRAM

**NOTE: Refer to layout for exact quantity and model number of devices.**

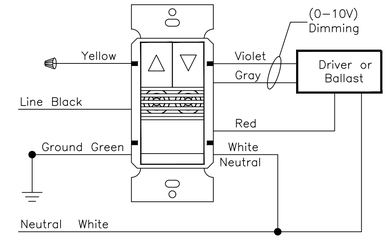


## DW-311
## WIRING DIAGRAM

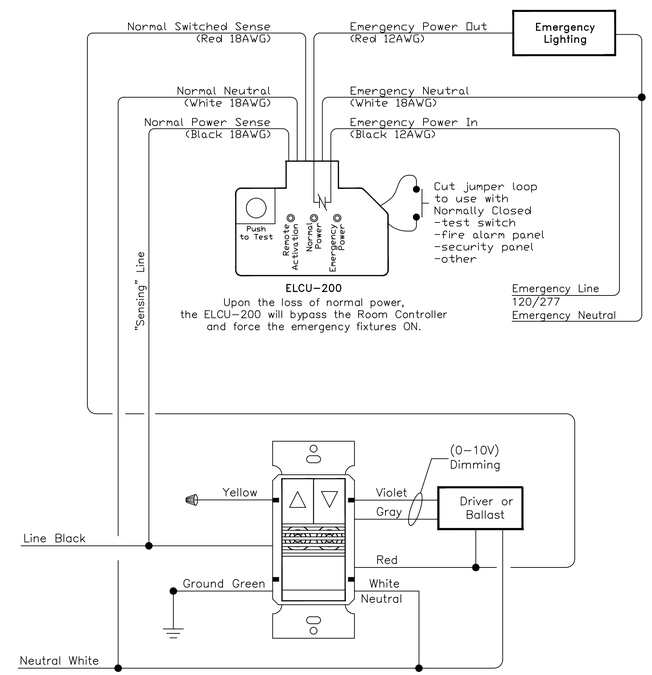


## DW-311 WITH ELCU-200
## WIRING DIAGRAM

**PLEASE CONTACT SLS CONTROLS WITH ANY QUESTIONS OR REVISIONS:**

**RON LEWERT - ron@slsltg.com**
**Cell Phone: 732-815-6931**

**DICKSON FERNANDES - dickson@slsltg.com**
**Cell Phone: 732-740-2294**

THESE DETAILS ARE PROVIDED FOR DIAGRAMMATIC PURPOSES ONLY. REFER TO THE MANUFACTURERS SHOP DRAWINGS, DETAILS AND INSTALLATION INSTRUCTIONS FOR FINAL REQUIREMENTS.

### *LIGHTING CONTROL NOTES*

1. All sensor locations are approximate. Refer to the Manufacture's installation instructions prior to installation.

2. If any questions arise regarding sensor placement, contact SLS Lighting and Controls prior to installation to schedule a field visit.

3. If pendant mounted fixtures are present, location and coverage of sensors should be reviewed.

4. All corner mount sensors located in rooms with recessed fixtures should be mounted on ceiling instead of the wall. Please review installation diagram for instructions.

5. Ceiling mounted sensors require to be located no closer than 6-8' from air supply/return registers.

6. Maximum number of sensors that can be wired in parallel to a single room controller or power pack, depends on sensor model (see individual sheets for mA consumption).

7. Contractor is responsible for field verification of required number of power packs (if apply).

8. One power pack is required for each circuit that is to be controlled.

9. Power packs and/or DLM Room Controllers are shown for zoning purposes only. Contractor is responsible for determining actual location and circuiting.

10. Power packs (if apply) should be mounted at least 6-12 inches from any sensor.

11. Locations of photocells (if shown) are diagrammatic and for quantitative purposes only. Actual mounting locations of photocells should be determined in an onsite pre-installation meeting prior to roughing in equipment.

12. Per the requirements of the electrical code, areas labeled as "mechanical" or "electrical" where work may occur are not to be controlled by automated lighting controls alone.

13. Turn off any power at the circuit breaker before wiring any product.

14. Free-topology DLM local network segments may include digital load controllers, switches and sensors; Cat 5e cable, 150' per device to 1,000' max, per each local network.

### *LIGHTING CONTROL LEGEND*
### *LEGRAND WATTSTOPPER*

| | | | |
|---|---|---|---|
| RC 1 | LMRC-101 | 120/277 VAC | 1-relay On/Off Room Controller |
| RC 2 | LMRC-211 | 120/277 VAC | 1-Relay On/Off 0-10V Dimming Room Controller |
| ER1 | ELCU-200 | 120/277 VAC | Emergency Shunt Relay |
| OS | LMUC-100-2 | 24VDC, 20mA | Ultrasonic Ceiling Sensor |
| OCC | LMDC-100 | 24VDC, 20mA | Dual Technology Ceiling Sensor |
| VS1 | LMDC-100 | 24VDC, 20mA | Dual Technology Ceiling Sensor |
| | PW-301 | 120/277 VAC | 1-Button PIR On/Off Switch Occ Sensor |
| | DW-311 | 120/277 VAC | 2-Button Dual Tech 0-10V Dim With Switch Occ Sensor |
| | LMSW-101 | 24VDC, 5mA | 1-button Digital Wall Switch |
| | LMDM-101 | 24VDC, 5mA | 1-button Dimming Wall Switch |
| IP1 | LMIN-104 | 24VDC, 20mA | Input Module |
| EPC | LMPO-200 | 24VDC | Analog Exterior Photocells |
| LMZC | LMZC-301 | 120/277 VAC | Zone Controller With Enclosure |

# BYRAM MUNCIPAL BUILDING
## ADMINISTRATIVE / CIVIL
10 MANSFIELD DRIVE
LOTS 16.01 - BLOCK 365
BYRAM TOWNSHIP
SUSSEX COUNTY, NEW JERSEY


THE NADER GROUP, LLC
Architects, Engineers, & Surveyors
111 Mill Street
Hackettstown, NJ 07840
p.908.850.3500 | f.908.441.5803
e. wassim.nader@thenadergroup.com
www.naderhouseofdesign.com

BRIAN D. TANNENHAUS


ISSUED FOR BID
NOT FOR CONSTRUCTION
08/01/2023

NJ PROFESSIONAL ENGINEER
NO. GE 45801

DATE: XX/XX/XXXX


BD engineering
NJ CERTIFICATE OF AUTHORIZATION – 24GA28116100
BD Engineering, LLC 732-886-5432
44 Main Street, Farmingdale, NJ 07727
www.bd-engineering.com Project No. 210133


| No. | DATE | REVISION |
|---|---|---|
| 00 | 08/01/23 | BID SET |

DRW BY: AW
SCALE: AS NOTED
DATE: JUNE 16, 2023
JOB No. 18.TNG029
DRAWING Name
ADMIN & CIVIL-LIGHTING CONTROLS AND LAYOUT
DRAWING No.
E-304

8/4/2023 2:44 PM

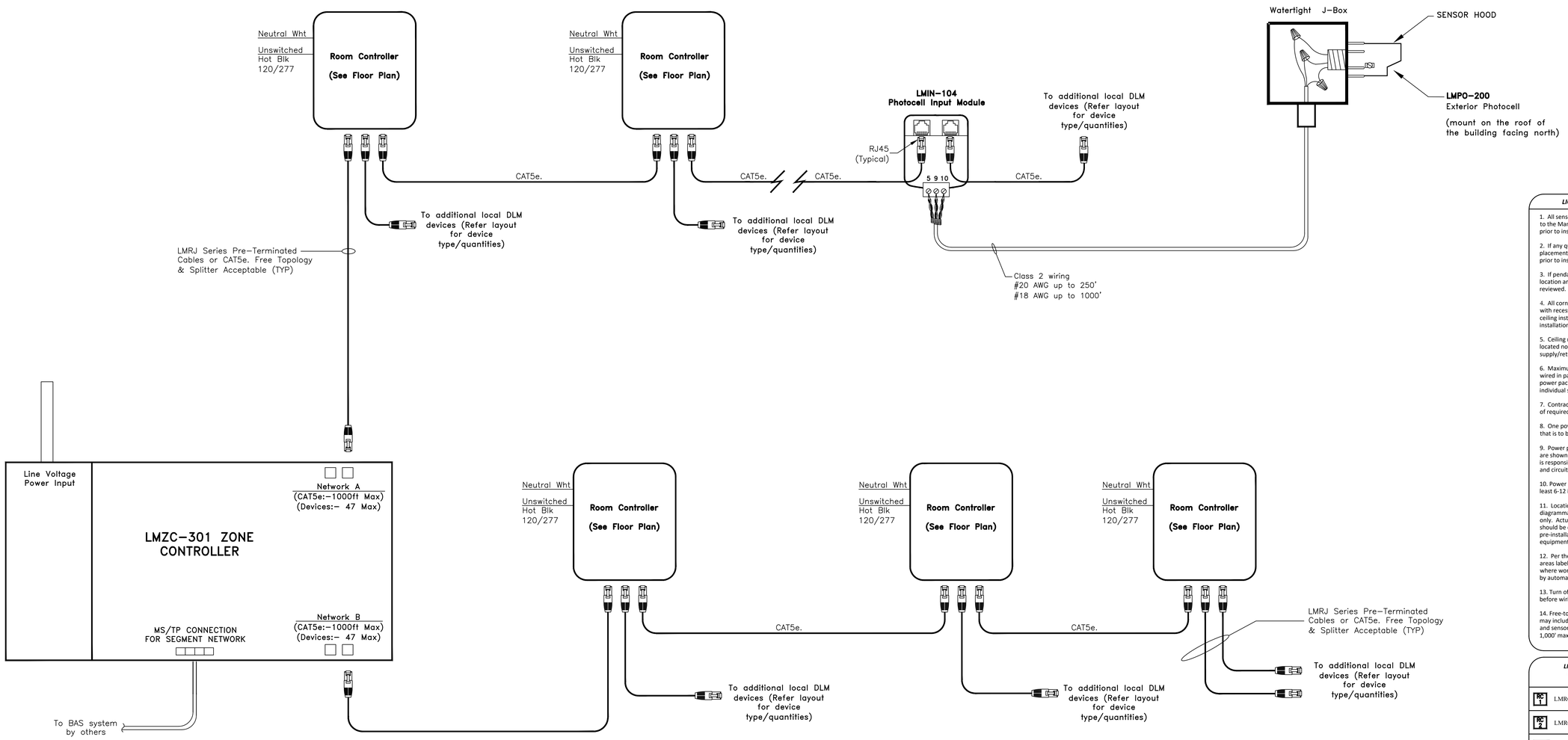


# TYPICAL LMZC-301 RISER DIAGRAM

**NOTE: Refer to layout for exact quantity and model number of devices.**

**PLEASE CONTACT SLS CONTROLS WITH ANY QUESTIONS OR REVISIONS:**

**RON LEWERT - ron@slsltg.com**
**Cell Phone: 732-815-6931**

**DICKSON FERNANDES - dickson@slsltg.com**
**Cell Phone: 732-740-2294**

THESE DETAILS ARE PROVIDED FOR DIAGRAMMATIC PURPOSES ONLY. REFER TO THE MANUFACTURERS SHOP DRAWINGS, DETAILS AND INSTALLATION INSTRUCTIONS FOR FINAL REQUIREMENTS.

### *LIGHTING CONTROL NOTES*

1. All sensor locations are approximate. Refer to the Manufacture's installation instructions prior to installation.

2. If any questions arise regarding sensor placement, contact SLS Lighting and Controls prior to installation to schedule a field visit.

3. If pendant mounted fixtures are present, location and coverage of sensors should be reviewed.

4. All corner mount sensors located in rooms with recessed fixtures should be mounted on ceiling instead of the wall. Please review installation diagram for instructions.

5. Ceiling mounted sensors require to be located no closer than 6-8' from air supply/return registers.

6. Maximum number of sensors that can be wired in parallel to a single room controller or power pack, depends on sensor model (see individual sheets for mA consumption).

7. Contractor is responsible for field verification of required number of power packs (if apply).

8. One power pack is required for each circuit that is to be controlled.

9. Power packs and/or DLM Room Controllers are shown for zoning purposes only. Contractor is responsible for determining actual location and circuiting.

10. Power packs (if apply) should be mounted at least 6-12 inches from any sensor.

11. Locations of photocells (if shown) are diagrammatic and for quantitative purposes only. Actual mounting locations of photocells should be determined in an onsite pre-installation meeting prior to roughing in equipment.

12. Per the requirements of the electrical code, areas labeled as "mechanical" or "electrical" where work may occur are not to be controlled by automated lighting controls alone.

13. Turn off any power at the circuit breaker before wiring any product.

14. Free-topology DLM local network segments may include digital load controllers, switches and sensors; Cat 5e cable, 150' per device to 1,000' max, per each local network.

### *LIGHTING CONTROL LEGEND*
### *LEGRAND WATTSTOPPER*

| | | | |
|---|---|---|---|
| RC 1 | LMRC-101 | 120/277 VAC | 1-relay On/Off Room Controller |
| RC 2 | LMRC-211 | 120/277 VAC | 1-Relay On/Off 0-10V Dimming Room Controller |
| ER1 | ELCU-200 | 120/277 VAC | Emergency Shunt Relay |
| OS1 | LMUC-100-2 | 24VDC, 20mA | Ultrasonic Ceiling Sensor |
| OS2 | LMDC-100 | 24VDC, 20mA | Dual Technology Ceiling Sensor |
| VS1 | LMDC-100 | 24VDC, 20mA | Dual Technology Ceiling Sensor |
| $1 OS | PW-301 | 120/277 VAC | 1-Button PIR On/Off Switch Occ Sensor |
| D1 OS | DW-311 | 120/277 VAC | 2-Button Dual Tech 0-10V Dim With Switch Occ Sensor |
| $1 LV | LMSW-101 | 24VDC, 5mA | 1-button Digital Wall Switch |
| D1 LV | LMDM-101 | 24VDC, 5mA | 1-button Dimming Wall Switch |
| IP1 | LMIN-104 | 24VDC, 20mA | Input Module |
| EPC | LMPO-200 | 24VDC | Analog Exterior Photocells |
| LMZC | LMZC-301 | 120/277 VAC | Zone Controller With Enclosure |

# BYRAM MUNCIPAL BUILDING
## ADMINISTRATIVE / CIVIL
10 MANSFIELD DRIVE
LOTS 16.01 - BLOCK 365
BYRAM TOWNSHIP
SUSSEX COUNTY, NEW JERSEY

THE NADER GROUP, LLC
Architects, Engineers, & Surveyors
111 Mill Street
Hackettstown, NJ 07840
p.908.850.3500 | f.908.441.5803
e. wassim.nader@thenadergroup.com
www.naderhouseofdesign.com

BRIAN D. TANNENHAUS

ISSUED FOR BID
NOT FOR CONSTRUCTION
08/01/2023

NJ PROFESSIONAL ENGINEER
NO. GE 45801

DATE: XX/XX/XXXX

BD engineering
NJ CERTIFICATE OF AUTHORIZATION – 24GA28116100
BD Engineering, LLC
44 Main Street, Farmingdale, NJ 07727
www.bd-engineering.com Project No. 210133

| No. | DATE | REVISION |
|---|---|---|
| 00 | | |
| | 08/01/23 | BID SET |

DRW BY: AW
SCALE: AS NOTED
DATE: JUNE 16, 2023
JOB No. 18.TNG029
DRAWING Name
ADMIN & CIVIL-LIGHTING CONTROLS AND LAYOUT
DRAWING No.
E-305

8/4/2023 2:44 PM

1. GENERAL NOTES, SYMBOLS LIST AND DETAILS ARE APPLICABLE TO ALL DRAWINGS MARKED P.
2. DRAWINGS ARE DIAGRAMMATIC: DETERMINE LOCATIONS OF SYSTEMS AND COMPONENTS IN FIELD.
3. NEITHER ACCURACY NOR COMPLETION OF UTILITY LOCATIONS SHOWN ON DRAWINGS IS GUARANTEED. DETERMINE EXACT LOCATIONS OF EXISTING UTILITY IN FIELD, WHETHER OR NOT SHOWN ON DRAWINGS. EXERCISE CAUTION AND IDENTIFY LOCATIONS OF UNMARKED UTILITY LINES AS NECESSARY TO PERFORM WORK OF THIS SECTION.
4. ALL PLUMBING WORK SHALL BE IN ACCORDANCE WITH THE CURRENT PLUMBING CODE AND ALL APPLICABLE LOCAL CODES AND DRAWINGS.
5. IT SHALL BE THE RESPONSIBILITY OF THIS CONTRACTOR TO COORDINATE HIS WORK WITH THAT OF ALL OTHER TRADES, INCLUDING (BUT NOT LIMITED TO), ELECTRICAL, HVAC PROCESS PIPING, KITCHEN EQUIPMENT VENDOR, STRUCTURAL AND GENERAL ARCHITECTURE.
6. ANY INTERFERENCE SHALL BE BROUGHT TO THE ATTENTION OF THE ENGINEER, AND SHALL BE RESOLVED PRIOR TO THE INSTALLATION OF THE WORK INVOLVED.
7. NO WORK SHALL BE INSTALLED IN VIOLATION OF ANY GOVERNING CODES. ANY WORK SHOWN ON THE DRAWINGS WHICH IS IN VIOLATION OF SUCH CODES SHALL BE BROUGHT TO THE ATTENTION OF THE ARCHITECT AND SHALL BE RESOLVED PRIOR TO THE INSTALLATION OF THE WORK INVOLVED.
8. ALL PIPING PENETRATING CEILING AND WALLS SHALL BE INSTALLED WITH CHROME (STAINLESS WHERE NOTED) PLATED ESCUTCHEONS AT THE PENETRATION. ALL PIPING PENETRATING EXTERIOR WALLS AND ROOFS SHALL BE FLASHED IN AN APPROVED MANNER AND SHALL BE SEALED WEATHER TIGHT. PIPING PENETRATING RATED PARTITIONS SHALL BE PROTECTED AS REQUIRD BY LOCAL CODE AUTHORITY.
9. MANUFACTURER'S MODEL NUMBERS ARE SPECIFIED SOLELY TO ESTABLISH STANDARDS OF QUALITY FOR PERFORMANCE AND MATERIALS.
10. PRODUCTION INSTALLATION SHALL ADHERE TO MANUFACTURERS' RECOMMENDATIONS.
11. PROVIDE ACCESS PANELS FOR EQUIPMENT THAT REQUIRES PERIODIC SERVICE.
12. TOPS OF ALL FLOOR DRAINS SHALL BE SET FLUSH WITH FINISHED FLOOR. ALL PIPING ABOVE GRADE SHALL BE PROPERLY SUPPORTED BY THE BUILDING STRUCTURE AND SHALL NOT REST ON CEILING TILES OR CEILING STRUCTURE.
13. CONTRACTOR SHALL COORDINATE ELECTRICAL CHARACTERISTICS AND REQUIREMENTS OF ALL PLUMBING EQUIPMENT WITH THE ELECTRICAL DRAWINGS AND SHALL FURNISH EQUIPMENT WIRED FOR THE VOLTAGES SHOWN HEREIN.
14. CONNECT NEW WORK TO EXISTING WORK IN A NEAT AND ACCEPTABLE MANNER. RESTORE EXISTING DISTURBED WORK TO ITS ORIGINAL CONDITION, INCLUDING MAINTENANCE OF WIRING CONTINUITY AS REQUIRED.
15. CONNECT NEW WORK TO EXISTING WORK WITH MINIMUM INTERFERENCE TO EXISTING FACILITIES. TEMPORARY SHUTDOWNS ARE PERMISSIBLE ONLY WITH WRITTEN CONSENT OF THE OWNER. ALARM AND EMERGENCY SYSTEMS ARE NOT TO BE INTERRUPTED.
16. FIRESTOPPING SHALL BE INSTALLED WHENEVER PIPING CROSSES FIRE RATED PARTITIONS. REFER TO THE ARCHITECTURAL PLANS FOR FIRE RATED PARTITION LOCATIONS. THE FIRESTOPPING SHALL MATCH OR EXCEED THE FIRE RATING OF THE PARTITION PENETRATED. ALL FIRESTOPPING SHALL BE A UL LISTED ASSEMBLY.
17. PROVIDE SHUTOFF VALVES ON ALL BRANCH PIPING AND ON ALL SUPPLIES TO INDIVIDUAL FIXTURES AND EQUIPMENT. PROVIDE BALL VALVES ON ALL WATER MAIN BRANCHES WHERE INDICATED ON DRAWINGS. ALL VALVES SHALL BE ACCESSIBLE.
18. ALL SLEEVES THROUGH CONCRETE FLOORS AND ALL CORE DRILLING OF CONCRETE FLOORS AND WALLS SHALL BE BY THIS CONTRACTOR.
19. COORDINATE ROOF PENETRATIONS WITH WORK OF OTHER SECTIONS AND WITH FLASHING REQUIREMENTS.
20. RUN PIPING CONCEALED IN WALLS AND CEILING CAVITIES, UNLESS SPECIFIED OTHERWISE, AND CLEAR OF CEILING INSERTS.
21. PROVIDE CLAMPS, OFFSETS, EXPANSION JOINTS, ANCHORS AND GUIDES AS NECESSARY TO PREVENT STRESS ON PIPING.
22. PROVIDE BALANCING VALVES AT SYSTEM LOOP RETURNS AND AT RETURN RISERS. PROVIDE SHUT-OFF VALVES AT SYSTEM LOOP SUPPLIES AND SUPPLY RISERS.
23. PROVIDE VENTS AT HIGH POINTS IN PIPING SYSTEMS AND DRAIN VALVES AT LOW POINTS.
24. PROVIDE GAUGE FITTINGS AND THERMOMETER WELLS AT HOT WATER SUPPLY AND RETURN BRANCHES AND AT PUMP INLETS AND OUTLETS.
25. VERIFY EXACT SIZES, LOCATIONS, INVERTS AND ELEVATIONS PRIOR TO RUNNING ANY PIPING. REFER TO ARCHITECTURAL DRAWINGS FOR EXACT LOCATIONS OF ALL FIXTURES AND EQUIPMENT.
26. PLUMBING SUBCONTRACTOR IS RESPONSIBLE FOR EXTENDING ALL REGULATOR VENTS TO ATMOSPHERE. REGULATORS ARE PART OF THIS CONTRACTORS SCOPE OF WORK.
27. WATER HEATERS SHALL BE INSTALLED WITH DRAIN PANS UNDER HEATERS. ROUTE PAN DRAINS TO NEAREST FLOOR DRAIN OR SAFE WASTE PIPE LOCATION.
28. PIPING SHALL NOT RUN OVER ELECTRICAL PANELS AND SHALL BE COORDINATED WITH WORK OF OTHER TRADES.
29. ALL NEW PIPING SHALL BE CONCEALED IN CEILING, WALL CAVITIES AND/OR UNDER SLAB, UNLESS OTHERWISE NOTED. EXISTING PIPING TO REMAIN BUT EXPOSED AS A RESULT OF DEMOLITION OPERATIONS SHALL BE RE-ROUTED/MODIFIED FOR CONCEALMENT IN CEILING OR WALL CAVITIES, OR UNDER SLAB, AT NO ADDITIONAL COST TO THE OWNER.
30. CONTRACTOR SHALL INCLUDE PATCHING OF CONCRETE FLOOR DUE TO SAWCUTTING REQUIREMENTS FOR NEW UNDERGROUND PIPING.
31. CONTRACTOR SHALL PROVIDE BACKFLOW PREVENTION DEVICES ON ALL WATER CONNECTED EQUIPMENT AS REQUIRED BY APPLICABLE CODE.
32. PC IS RESPONSIBLE TO PROVIDE ACCESS PANELS FOR ANY CONCEALED PLMBING WORK THAT MUST BE ACCESSIBLE EITHER BY CODE OR AS INDICATED IN THE DOCUMENTS. ALL ACCESS DOOR LOCATIONS SHALL BE REVIEWED AND APPROVED BY ARCHITECT PRIOR TO INSTALLATION OF DEVICE REQUIRING THE ACCESS PANEL. ALL ACCESS DOORS MUST MATCH THE FIRE RATING AND CONSTRUCTION TYPE OF THE CEILING OR WALL PENETRATION AS DESIGNATED ON THE ARCHITECTURAL DRAWINGS.
33. THE CONTRACTOR SHALL BRING ANY CONFLICTS IN THE DRAWINGS TO THE ATTENTION OF THE ENGINEER DURING THE BIDDING PROCESS. IF NOT BROUGHT UP TO THE ENGINEER DURING THE BIDDING PROCESS THE MORE EXPENSIVE OPTION SHALL BE CHOSEN FOR BIDDING PURPOSES.
34. THE CONTRACTOR SHALL PROVIDE ADJUSTABLE THERMOSTATIC MIXING VALVES FOR ALL HAND SINKS TO LIMIT THE HOT WATER TEMPERATURE COMING OUT OF THE FAUCET TO 105 DEGREES FAHRENHEIT BUT BE ADJUSTABLE UP TO 110 DEGREES FAHRENHEIT AS DIRECTED BY THE CLIENT.
35. THE CONTRACTOR SHALL USE THERMOSTATIC MIXING VALVES THAT COMPLY WITH ASSE STANDARDS. POINT OF USE MIXING VALVES SHALL COMPLY WITH ASSE 1070-2020 OR 1069-2020. MANIFOLD MIXING VALVES SHALL COMPLY WITH ASSE 1069-2020. FACILITY WATER DISTRIBUTION MIXING VALVES SHALL COMPLY WITH ASSE 1017-2009. EMERGENCY EYEWASH / SHOWER MIXING VALVES SHALL COMPLY WITH ASSE 1071-2012.
36. THE CONTRACTOR SHALL PROVIDE COVERS FOR ALL PIPING ABOVE AND BELOW GROUND AT THE END OF THE DAY AND DURING THE DAY TO ENSURE DEBRIS DOES NOT ENTER THE PIPE. FAILURE TO DO THIS WILL REQUIRE THE CONTRACTOR TO SCOPE THE PIPING AFTER FINAL INSTALLATION AND VIDEO TAPE THE SCOPING FOR RECORD TO ENSURE NO DEBRIS IS PRESENT IN THE PIPE. ANY DEBRIS WILL BE REMOVED OR THE PIPE WILL BE REPLACED AT THE CONTRACTORS EXPENSE INCLUDING THE TRENCHING AND REPAIR OF ANY FLOOR OR GRADE FINISHES. A COPY OF THE VIDEO SHALL BE GIVEN TO THE OWNER FOR THEIR RECORD.
37. FOR ALL FAST ACTING VALVES SUCH AS BUT NOT LIMITED TO ELECTRICALLY OPERATED VALVES, HOSE STATIONS, HOSE SPRAYERS, FLUSHOMETERS, ETC., WATER HAMMER ARRESTERS ARE TO BE PROVIDED. ARRESTER SHALL BE SIZED AS PER THE ARRESTER MANUFACTURER REQUIREMENTS AND COORDINATED WITH THE SIZE OF THE FAST ACTING VALVE.
38. PLUMBING CONNECTIONS ARE SHOWN FOR DIAGRAMMATIC PURPOSES AND THE CONTRACTOR SHALL NOT BASE THEIR BID ON THE LOCATION OF THOSE CONNECTIONS. SUBMISSION OF A BID INDICATES AN UNDERSTANDING THE CONTRACTOR WILL CONNECT THE PLUMBING CONNECTIONS TO THE EQUIPMENT IN THE LOCATION SPECIFIED BY THE MANUFACTURE OR PER CONSTRUCTION RESTRICTIONS AT NO ADDITIONAL COST TO THE CLIENT.
39. PLUMBING CONTRACTOR IS RESPONSIBLE FOR COORDINATING ALL FINAL UTILITY CONNECTIONS WITH THE UTILITY COMPANIES. FOR EXAMPLE: IF THE PROJECT HAS NATURAL GAS SERVICE AND THE SYSTEM IS EXISTING THE CONTRACTOR SHALL CALL THE UTILITY COMPANY AND TAKE OVER AS THE LEAD CONTACT PERSON FOR THE ADDITIONAL LOAD APPLICATION AND BE THE NEW POINT OF CONTACT FOR ANY CHANGES REQUIRED FOR THE EXISTING GAS SERVICE. THIS INTRODUCTION AND CHANGE OF POINT CONTACT SHALL HAPPEN WITHIN THE FIRST TWO WEEKS OF STARTING THE PROJECT. IT IS THE PC'S RESPONSIBILITY TO COMMUNICATE WITH THE UTILITY COMPANY SERVICE START DATES AS TO NOT DELAY THE PROJECT WITH INADEQUATE UTILITY SERVICES.
40. CONTRACTOR SHALL PROVIDE MANUFACTURED PROTECTIVE SHIELDING PIPE COVERS FOR HOT AND COLD WATER SUPPLY, TRAP, AND DRAIN PIPING IN COMPLIANCE WITH THE AMERICANS WITH DISABILITIES ACT (ADA) REQUIREMENTS.

## GENERAL NOTES

THE CONTRACTOR SHALL CONFORM TO THE LATEST BUILDING CODES:

IBC 2021 WITH NEW JERSEY AMENDMENTS

NSPC 2021 WITH NEW JERSEY AMENDMENTS

## APPLICABLE CODES

| SYMBOL | DESCRIPTION |
|---|---|
| | NEW - UNLESS OTHERWISE NOTED, DARK LINE WEIGHT. |
| | EXISTING - UNLESS OTHERWISE NOTED, LIGHT LINE WEIGHT |
| S | SANITARY PIPING |
| W | WASTE PIPING |
| CWV | COMINATION WASTE VENT PIPING |
| | VENT PIPING (ABOVE) |
| | VENT PIPING (BELOW) |
| G | NATURAL GAS |
| | COLD WATER |
| | HOT WATER |
| | HOT WATER RECIRC. |
| | CONDENSATE |
| | SHUT OFF VALVE |
| | CHECK VALVE |
| | BACKFLOW PREVENTION |
| | TEMPERING VALVE |
| | BALANCING VALVE |
| | FLOOR SINK |
| | FLOOR DRAIN |
| | FLOOR CLEAN OUT |
| | WALL CLEAN OUT |
| | HORIZONTAL CLEAN OUT |
| | CASE DRAIN |
| | STAND PIPE |
| | TRENCH DRAIN |
| | P TRAP |
| | PIPE DOWN & DROP |
| | PIPE UP & RISE |
| | BACKWATER VALVE |
| | HOSE BIBB |
| | WASH DOWN FAUCET / HOSE BIBB |
| | WATER FILTER |
| | FLOW ARROW |
| | TRAP PRIMER |
| | CONNECT TO EXISTING |
| X | DRAWING NOTE - 'X' DENOTES NOTE NUMBER SHOWN ON PLAN. |
| X | KEY NOTE - 'X' DENOTES NOTE NUMBER SHOWN FOR ALL PLUMBING PLANS. |
| X | DEMOLITION NOTE - 'X' DENOTES NOTE NUMBER SHOWN ON PLAN |

ABBREVIATIONS

| | |
|---|---|
| ASSY | ASSEMBLY |
| BFF | BELOW FINISHED FLOOR |
| BFG | BELOW FINISHED GRADE |
| CO | CLEAN OUT |
| COMP | COMPARTMENT |
| CW | COLD WATER |
| DN | DOWN |
| DOM | DOMESTIC WATER |
| DW | DISH WASHER |
| EWH | ELECTRIC WATER HEATER |
| EX | EXISTING TO REMAIN |
| FCO | FLOOR CLEAN OUT |
| FD | FLOOR DRAIN |
| FS | FLOOR SINK |
| HB | HOSE BIBB |
| HS | HAND SINK |
| HW | HOT WATER |
| HWR | HOT WATER RECIRCULATION |
| MS | MOP SINK |
| NTS, N.T.S. | NOT TO SCALE |
| PC | PLUMBING CONTRACTOR |
| RE | EXISTING TO BE REMOVED |
| REX | EXISTING TO BE RELOCATED |
| SAN | SANITARY |
| SP | STAND PIPE |
| SS | STAINLESS STEEL |
| TD | TRENCH DRAIN |
| TYP | TYPICAL |
| U/C | UNDER COUNTER |
| V | VENT |
| VIF | VERIFY IN FIELD |
| VTR | VENT THRU ROOF |
| W | WASTE |
| WCO | WALL CLEAN OUT |

NOT ALL SYMBOLS AND ABBREVIATIONS SHOWN ON THIS PLAN ARE USED IN THE FOLLOWING DRAWINGS.

## SYMBOL LEGENDS AND ABBREVIATIONS

## PLUMBING FIXTURE AND PIPING CONNECTIONS

| MARK | FIXTURE | SIZE IN INCHES | | | | REMARKS | MODEL |
|---|---|---|---|---|---|---|---|
| | | SAN | VENT | COLD | HOT | | |
| P-1 | WATER CLOSET | 4" | 2" | ½ | -- | FLOOR MOUNTED | AMERICAN STANDARD CHAMPION RIGHT HEIGHT BARRIER-FREE ELONGATED FLUSH TANK TOILET OR APPROVED EQUAL. PROVIDE OPEN FRONT SEAT |
| P-2 | URINAL | 2" | 1½ | ¾ | -- | WALL MOUNTED | AMERICAN STANDARD 'WASHBROOK' TOP SPUD, WASHOUT URINAL, 0.125 GPF, MODEL #6045.013.002, OR APPROVED EQUAL |
| P-3 | LAVATORY | 1½ | 1½ | ½ | ½ | BARRIER-FREE LEVER HANDLES LAVATORY 5500.175 | AMERICAN STANDARD BARRIER-FREE WALL-HUNG "LUCERNE" LAVATORY, OR APPROVED EQUAL. 4" CENTER SET |
| P-4 | FLOOR DRAIN | 2" | -- | -- | -- | CAST IRON | WATTS FD-100A OR APPROVED EQUAL. PROVIDE TRAP SEALS. |
| P-5 | SINK | 1½ | 1½ | ½ | ½ | STAINLESS STEEL KITCHEN SINK FAUCET LKD2442C | ELKAY 'LUSTERTONE' BARRIER-FREE 29"x18"x6½" DROP IN STAINLESS STEEL DOUBLE BOWL KITCHEN SINK, MODEL LRADQ291865PD, OR APPROVED EQUAL. 3 HOLE DRILLING |
| P-6 | WATER BOTTLE FILLER | 2" | 1½ | -- | -- | STAINLESS STEEL WATER BOTTLE FILLER | ELKAY MODEL# LZWSGRNM8PK IN WALL STAINLESS STEEL REFRIGERATED, FILTERED WATER BOTTLE FILLING STATION, OR APPROVED EQUAL |
| P-7 | JANITOR SINK | 3" | 1½ | ½ | ½ | FAUCET 830AA | FIAT TSB100 24"x24"x12" PR APPROVED EQUAL |
| P-8 | URINAL FLOOR DRAIN | 2" | -- | -- | -- | STAINLESS STEEL | ZURN MODEL # Z-1749 12"X12" SANI FLOR RECEPTOR, OR APPROVED EQUAL |
| P-10 | HOSE BIB | -- | -- | ½ | -- | BRASS LEAD FREE | FROST FREE BRASS LEAD FREE HOSE BIBS MODEL, JAY R SMITH 5519 OR APPROVED EQUAL. |
| P-11 | FLOOR CLEANOUT | 4" | -- | -- | -- | CAST IRON | WATTS CO-200-R OR APPROVED EQUAL |
| P-12 | WALL CLEANOUT | 4" | -- | -- | -- | CAST IRON | ZURN Z1441 OR APPROVED EQUAL |
| P-13 | RECIRCULATION PUMP | -- | -- | -- | -- | | TACO 0006e3 , 120 VOLT 1 PHASE 0.54 AMPS 44 WATTS |
| P-14 | EXPANSION TANK | -- | -- | ¾" | -- | | TACO PAX-10 |

## ELECTRIC WATER HEATER SCHEDULE

| No. | MANUFACTURE MODEL | KW RATING | ELECTRICAL V/PH/HZ | AMPS |
|---|---|---|---|---|
| HWH #1 | RHEEM ELD30-TB | 10.0 | 208/3/60 | 27.8 |
| HWH #2 | RHEEM EGSPI0 WATER HEATER | 4.5 | 208/1/60 | 21.6 |

## PROJECT NOTES:

THE CONTRACTOR SHALL RECEIVE AND REVIEW ALL OF THE PROJECTS DRAWINGS AND SPECIFICATIONS SUCH AS ARCHITECTURAL, STRUCTURAL, HVAC, ELECTRICAL, PLUMBING, FIRE ALARM, SPRINKLER, SITE, ETC. TO UNDERSTAND THE FULL SCOPE OF WORK. FAILURE TO RECEIVE AND REVIEW THOSE PLANS DURING BIDDING WILL RESULT IN THE DENIAL OF EXTRA'S.


P-100-C PLUMBING COVER SHEET

P-200-C PLUMBING SANITARY PLAN

P-300-C PLUMBING WATER SUPPLY PLAN

P-400-C PLUMBING ATTIC PLAN

P-500-C PLUMBING DETAILS


## DRAWING LIST

BYRAM MUNCIPAL BUILDING
ADMINISTRATIVE / CIVIL
10 MANSFIELD DRIVE
LOTS 16.01 - BLOCK 365
BYRAM TOWNSHIP
SUSSEX COUNTY, NEW JERSEY


THE NADER GROUP, LLC
Architects, Engineers, & Surveyors
111 Mill Street
Hackettstown, NJ 07840
p.908.850.3500 | f.908.441.5803
e. wassim.nader@thenadergroup.com
www.naderhouseofdesign.com

BRIAN D. TANNENHAUS


ISSUED FOR BID
NOT FOR CONSTRUCTION
08/01/2023

NJ PROFESSIONAL ENGINEER
NO. GE 45801

DATE: XX/XX/XXXX


BD engineering
NJ CERTIFICATE OF AUTHORIZATION – 24GA28116100
BD Engineering, LLC
44 Main Street, Farmingdale, NJ 07727
732-886-5432
www.bd-engineering.com Project No. 210133


| No. | DATE | REVISION |
|---|---|---|
| 00 | 08/01/23 | BID SET |

DRW BY: RL
SCALE: AS NOTED
DATE: JUNE 16, 2023
JOB No. 18.TNG029
DRAWING Name
PLUMBING COVER SHEET
DRAWING No.
P-100-C

8/4/2023 2:44 PM

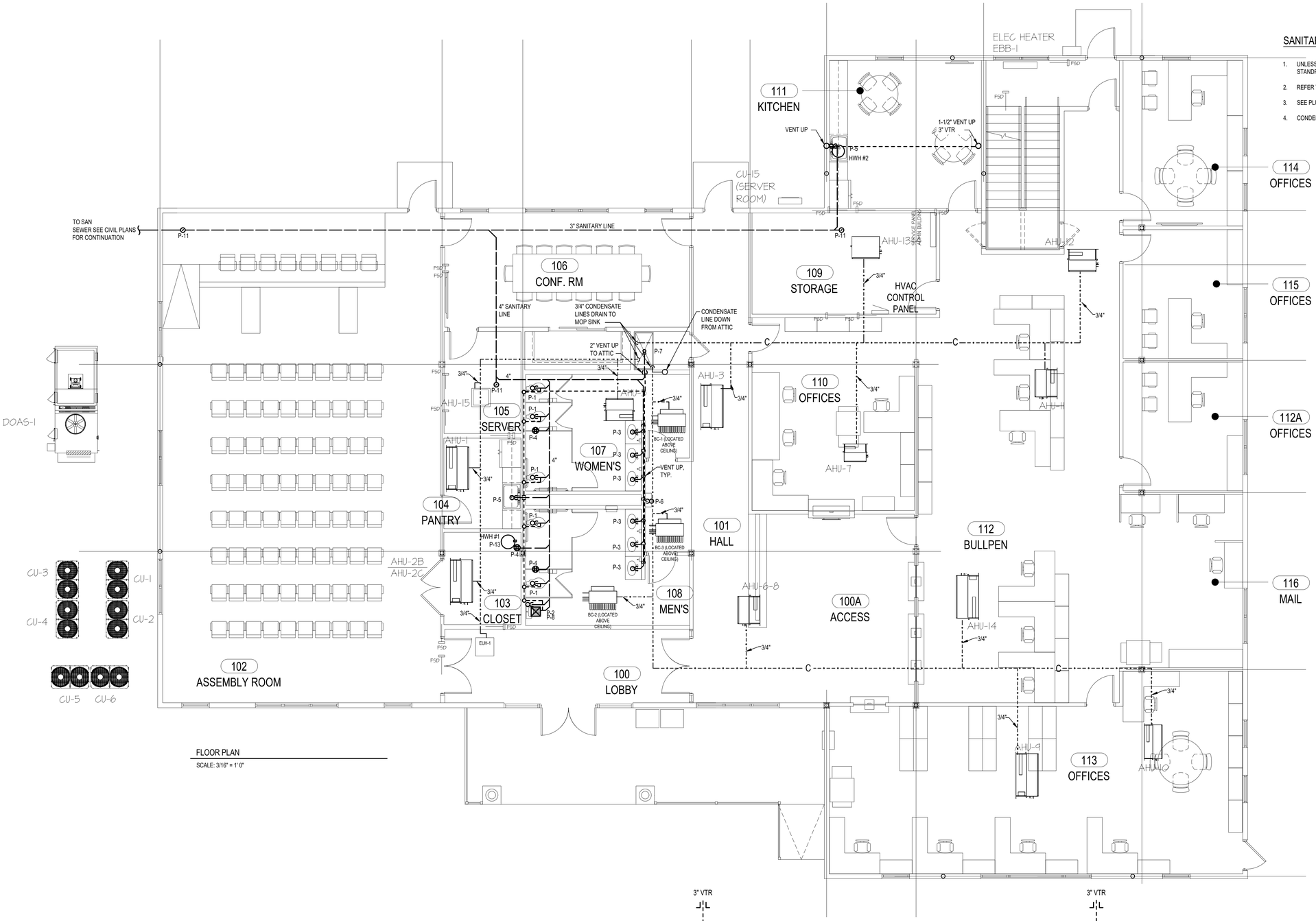


FLOOR PLAN

SCALE: 3/16" = 1' 0"

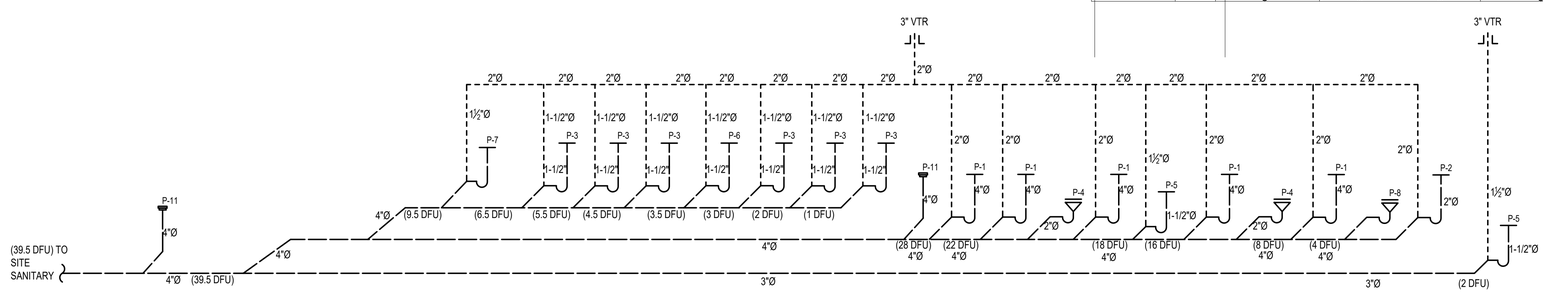


SANITARY RISER

SCALE: NONE

## SANITARY GENERAL NOTES:

1. UNLESS OTHERWISE NOTED, FLOOR DRAINS, FLOOR SINKS, AND/OR STANDPIPES SHALL BE TRAPPED JUST BELOW THE FLOOR.
2. REFER TO RISER DIAGRAM FOR ADDITIONAL INFORMATION.
3. SEE PLUMBING SCHEDULES FOR FIXTURE PIPE CONNECTION SIZES.
4. CONDENSATE PIPING PROVIDED BY PLUMBING CONTRACTOR.

# BYRAM MUNCIPAL BUILDING
## ADMINISTRATIVE / CIVIL
10 MANSFIELD DRIVE
LOTS 16.01 - BLOCK 365
BYRAM TOWNSHIP
SUSSEX COUNTY, NEW JERSEY


THE NADER GROUP, LLC
Architects, Engineers, & Surveyors
111 Mill Street
Hackettstown, NJ 07840
p.908.850.3500 | f.908.441.5803
e. wassim.nader@thenadergroup.com
www.naderhouseofdesign.com

BRIAN D. TANNENHAUS


ISSUED FOR BID
NOT FOR CONSTRUCTION
08/01/2023

NJ PROFESSIONAL ENGINEER
NO. GE 45801

DATE: XX/XX/XXXX


BD engineering
NJ CERTIFICATE OF AUTHORIZATION – 24GA28116100
BD Engineering, LLC
44 Main Street, Farmingdale, NJ 07727
732-886-5432
www.bd-engineering.com Project No. 210133


| No. | DATE | REVISION |
|---|---|---|
| 00 | 08/01/23 | BID SET |

DRW BY: RL
SCALE: AS NOTED
DATE: JUNE 16, 2023
JOB No. 18.TNG029
DRAWING Name

PLUMBING SANITARY PLAN

DRAWING No.

P-200-C

8/4/2023 2:44 PM

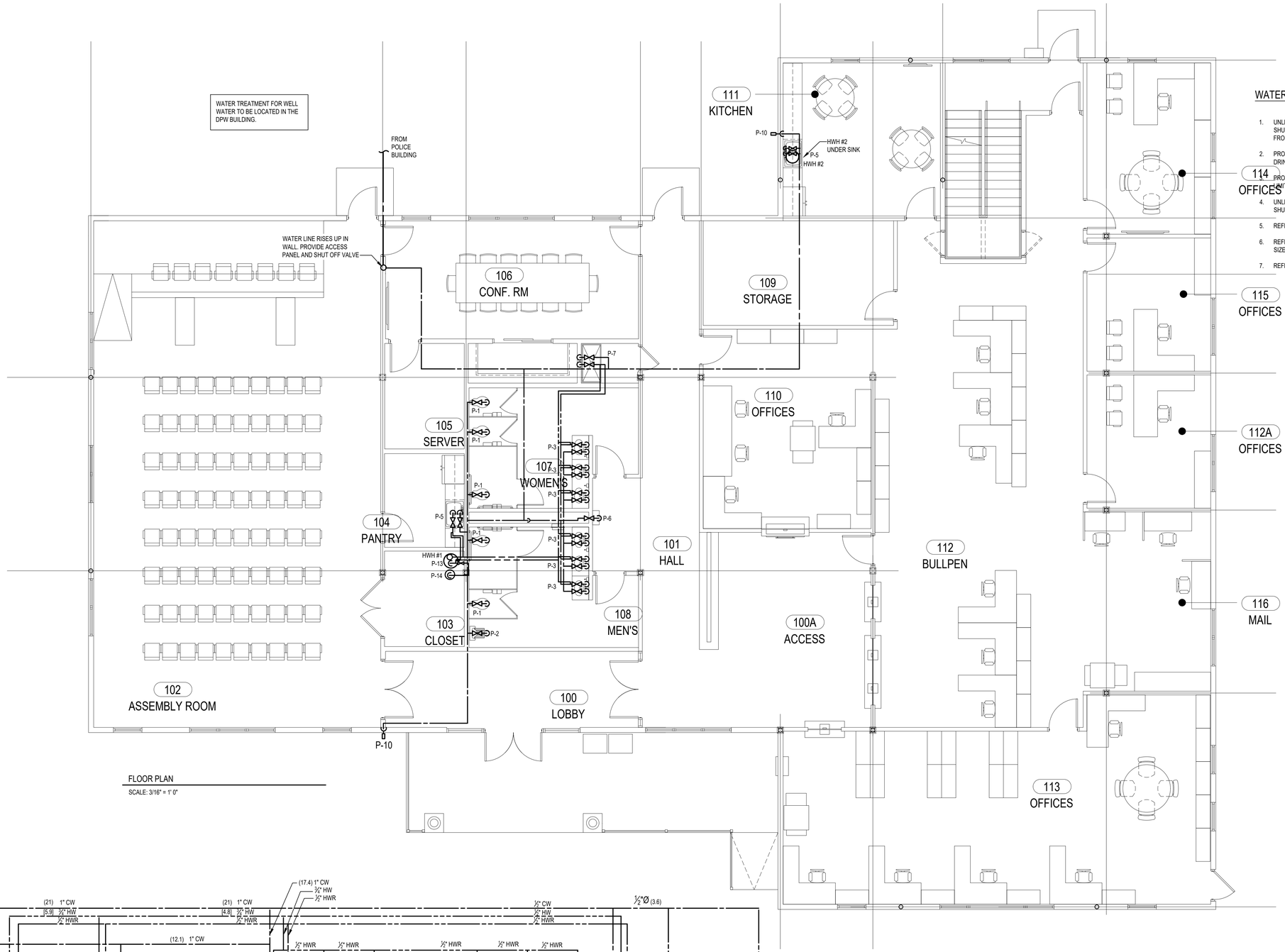


FLOOR PLAN

SCALE: 3/16" = 1' 0"

## WATER GENERAL NOTES:

1. UNLESS OTHERWISE NOTED, ALL BRANCH PIPING SHALL HAVE A SHUTOFF VALVE INSTALLED WHERE THE BRANCH TAKE OFF BEGINS FROM THE MAIN.
2. PROVIDE WATER FILTERS AT THE WATER CONNECTION TO THE DRINKING FOUNTAIN.
3. PROVIDE THERMOSTATIC MIXING VALVES FOR ALL HAND SINKS AND LIMIT THE WATER TEMPERATURE TO 110°F
4. UNLESS OTHERWISE NOTED, ALL PLUMBING FIXTURES SHALL HAVE SHUT OFF VALVES AT THE FIXTURE.
5. REFER TO RISER DIAGRAM FOR ADDITIONAL INFORMATION.
6. REFER TO PLUMBING SCHEDULES FOR FIXTURE PIPE CONNECTION SIZES.
7. REFER TO DETAILS FOR SPECIFIC INSTALLATION REQUIREMENTS.

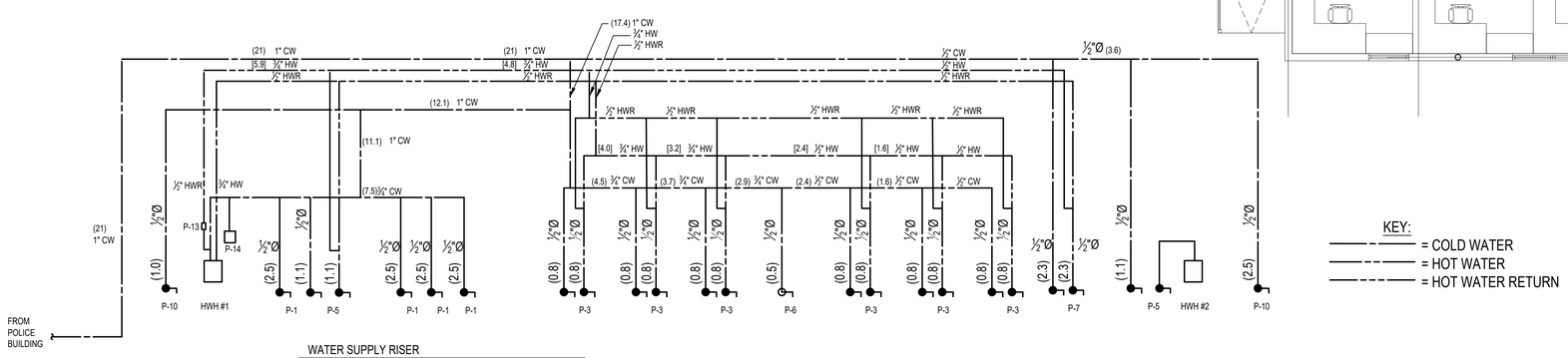


WATER SUPPLY RISER

SCALE: NONE

KEY:

= COLD WATER
= HOT WATER
= HOT WATER RETURN

# BYRAM MUNCIPAL BUILDING
## ADMINISTRATIVE / CIVIL
10 MANSFIELD DRIVE
LOTS 16.01 - BLOCK 365
BYRAM TOWNSHIP
SUSSEX COUNTY, NEW JERSEY

THE NADER GROUP, LLC
Architects, Engineers, & Surveyors
111 Mill Street
Hackettstown, NJ 07840
p.908.850.3500 | f.908.441.5803
e. wassim.nader@thenadergroup.com
www.naderhouseofdesign.com

BRIAN D. TANNENHAUS

ISSUED FOR BID
NOT FOR CONSTRUCTION
08/01/2023

NJ PROFESSIONAL ENGINEER
NO. GE 45801
DATE: XX/XX/XXXX

BD engineering
NJ CERTIFICATE OF AUTHORIZATION – 24GA28116100
BD Engineering, LLC 732-886-5432
44 Main Street, Farmingdale, NJ 07727
www.bd-engineering.com Project No. 210133

| No. | DATE | REVISION |
|---|---|---|
| 00 | 08/01/23 | BID SET |

DRW BY: RL
SCALE: AS NOTED
DATE: JUNE 16, 2023
JOB No. 18.TNG029
DRAWING Name
PLUMBING WATER SUPPLY PLAN
DRAWING No.
P-300-C

8/4/2023 2:44 PM

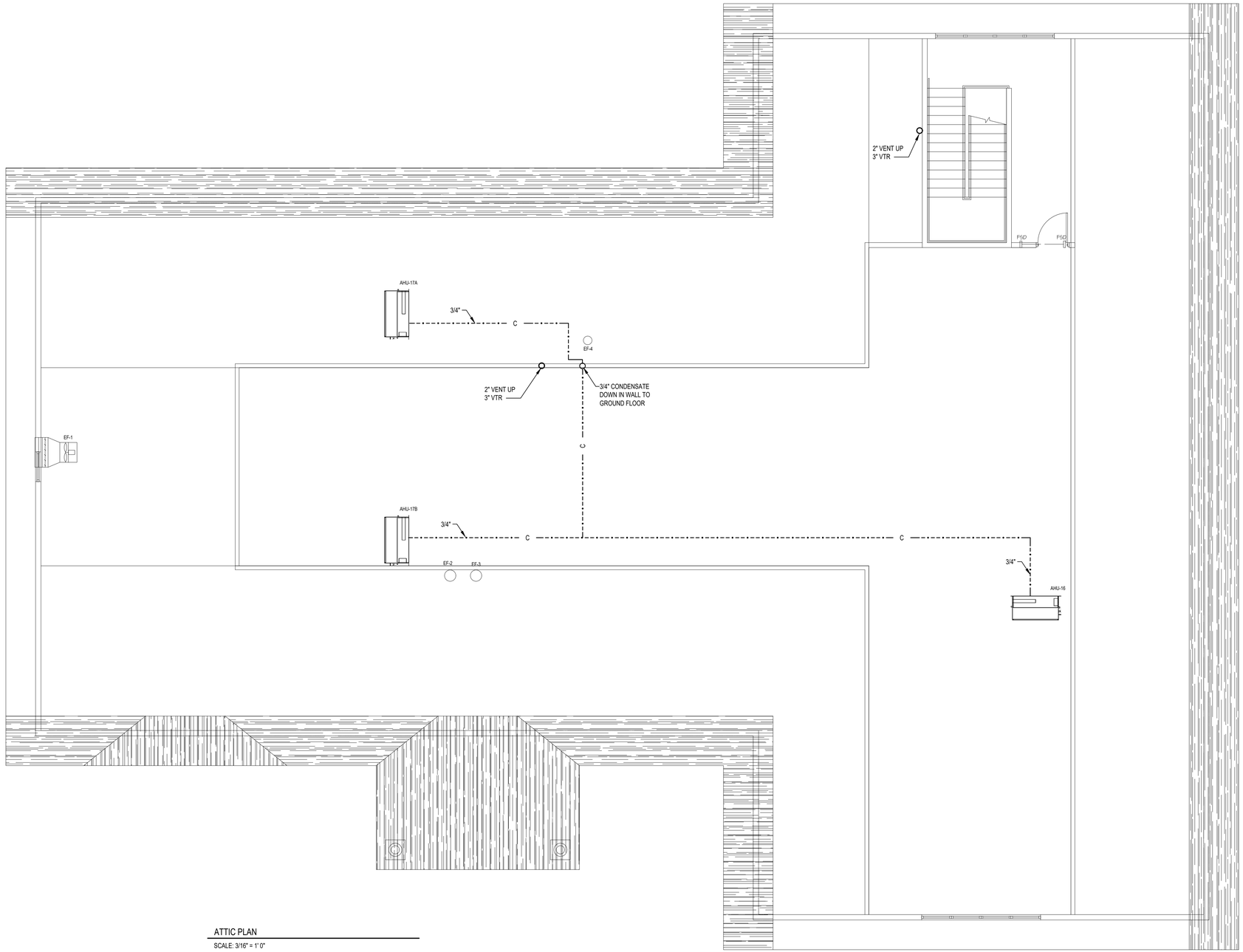


ATTIC PLAN

SCALE: 3/16" = 1' 0"

# BYRAM MUNCIPAL BUILDING
## ADMINISTRATIVE / CIVIL
10 MANSFIELD DRIVE
LOTS 16.01 - BLOCK 365
BYRAM TOWNSHIP
SUSSEX COUNTY, NEW JERSEY

THE NADER GROUP, LLC

Architects, Engineers, & Surveyors

111 Mill Street
Hackettstown, NJ 07840

p.908.850.3500 | f.908.441.5803
e. wassim.nader@thenadergroup.com

www.naderhouseofdesign.com

BRIAN D. TANNENHAUS

ISSUED FOR BID
NOT FOR CONSTRUCTION
08/01/2023

NJ PROFESSIONAL ENGINEER
NO. GE 45801

DATE: XX/XX/XXXX

BD engineering

NJ CERTIFICATE OF AUTHORIZATION – 24GA28116100
BD Engineering, LLC
44 Main Street, Farmingdale, NJ 07727
www.bd-engineering.com Project No. 210133

| No. | DATE | REVISION |
|---|---|---|
| 00 | | |
| | 08/01/23 | BID SET |

DRW BY: RL

SCALE: AS NOTED

DATE: JUNE 16, 2023

JOB No. 18.TNG029

DRAWING Name

PLUMBING ATTIC PLAN

DRAWING No.

P-400-C

8/4/2023 2:44 PM

PROVIDE ROUND SECURED ADJUSTABLE TOP WITH "CO" ON COVER. PROVIDE CLEANOUT TOP WITH VARIATIONS SUITABLE FOR FLOOR COVERING (CARPET MARKER, RECESSED FOR TILE, SCORIATED FOR UNFINISHED FLOORS).

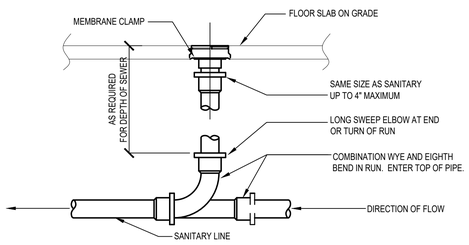


LOCATE AT BUILDING EXIT, AT ENDS OF RUNS, AT TURNS OF PIPE GREATER THEN 45°, AT 50' INTERVALS ON STRAIGHT RUNS, AND WHERE SHOWN ON PLANS. PROVIDE BACKFILL (if applicable) PER ARCHITECTURAL SPECIFICATIONS. LOCATE CLEANOUTS WHERE THERE IS 18" CLEAR AROUND. CONSULT LOCAL CODES FOR OTHER FCO REQUIREMENTS.

FLOOR CLEANOUT DETAIL

SCALE: NONE

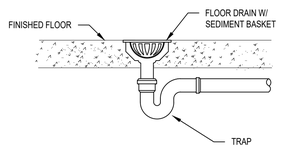


FLOOR DRAIN DETAIL

SCALE: NONE

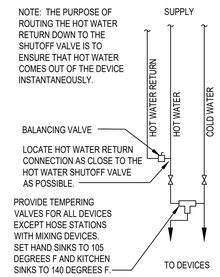


HOT WATER RETURN AT WATER DEVICE AND TEMPERING VALVE.

SCALE: NONE

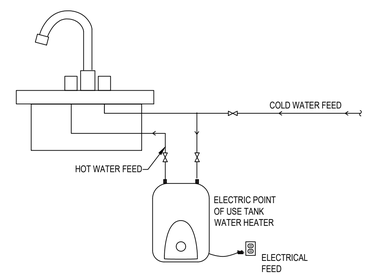


POINT OF USE TANK TYPE WATER HEATER DETAIL

SCALE: NONE

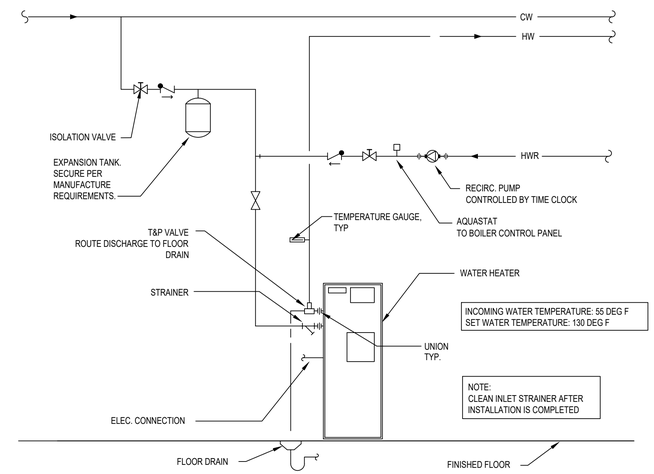


WATER HEATER DETAIL

SCALE: NONE

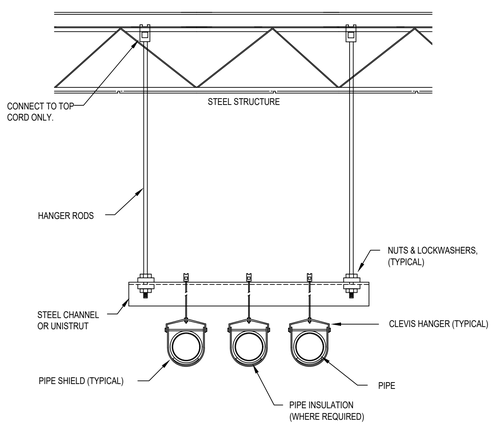


TRAPEZE PIPE HANGER DETAIL

SCALE: NONE

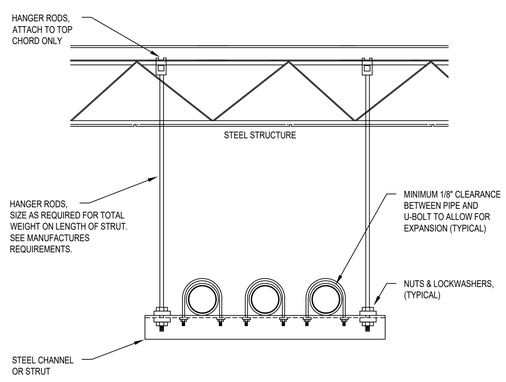


TRAPEZE PIPE HANGER DETAIL

SCALE: NONE

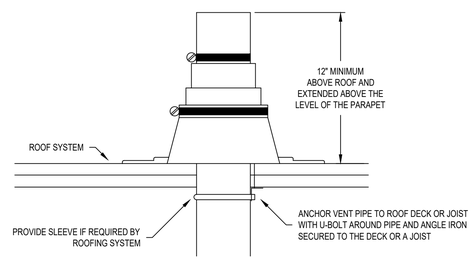


REFER TO PLANS FOR VTR PIPE SIZES AND LOCATIONS. LOCATE VTR MINIMUM TEN FEET HORIZONTAL OR THREE FEET VERTICAL ABOVE ANY BUILDING OPENING OR FRESH AIR INTAKE, AND ONE FOOT FROM ANY VERTICAL SURFACE. PROVIDE 1" FIBERGLASS INSULATION WITH ALL-SERVICE JACKET ON VENT PIPE INSIDE BUILDING WITHIN SIX FEET OF VENT THRU ROOF LOCATION. FLASHING AND COUNTER FLASHING ARE TO BE COMPATIBLE WITH THE ROOFING SYSTEM.

VENT THROUGH ROOF DETAIL

SCALE: NONE

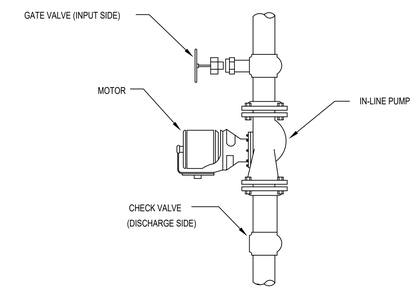


TYPICAL INLINE PUMP DETAIL

SCALE: NONE

| MINIMUM GRAVITY DRAINED CONDENSATE PIPE SIZES | |
|---|---|
| TONS OF COOLING | MIN DRAIN SIZE |
| 0-20 | 3/4" |
| 21-40 | 1" |
| 41-90 | 1-1/4" |
| 91-125 | 1-1/2" |
| 126-250 | 2" |
| 251 AND LARGER | 3" |

NOTE:
DRAINAGE FITTINGS SHALL BE USED FOR PIPE SIZES 1-1/4" AND LARGER

CONDENSATE PIPING SIZING CHART

SCALE: NONE

8/4/2023 2:44 PM

BYRAM MUNCIPAL BUILDING
ADMINISTRATIVE / CIVIL
10 MANSFIELD DRIVE,
LOTS 16.01 - BLOCK 365
BYRAM TOWNSHIP
SUSSEX COUNTY, NEW JERSEY


THE NADER GROUP, LLC
Architects, Engineers, & Surveyors
111 Mill Street
Hackettstown, NJ 07840
p.908.850.3500 | f.908.441.5803
e. wassim.nader@thenadergroup.com
www.naderhouseofdesign.com

BRIAN D. TANNENHAUS


ISSUED FOR BID
NOT FOR CONSTRUCTION
08/01/2023

NJ PROFESSIONAL ENGINEER
NO. GE 45801

DATE: XX/XX/XXXX


BDi engineering
NJ CERTIFICATE OF AUTHORIZATION – 24GA28116100
BD Engineering, LLC 732-886-5432
44 Main Street, Farmingdale, NJ 07727
www.bd-engineering.com Project No. 210133


| No. | DATE | REVISION |
|---|---|---|
| 00 | 08/01/23 | BID SET |

DRW BY: RL
SCALE: AS NOTED
DATE: JUNE 16, 2023
JOB No. 18.TNG029
DRAWING Name
PLUMBING DETAILS
DRAWING No.
P-500-C